Washer-Extractor

Refer to Page 5 for Model Numbers

Parts

Alliance Laundry Systems

www.alliancelaundry.com

Part No. D0245R5
January 2014

Table of Contents

Title	Page
Parts Ordering Information	3
Nameplate Location	3
Model Identification	5
Washer-Extractor Product Overview	6
Frame	8
Bearing Housing	10
Shell and Basket	12
Basket, Pulley and Belt	14
Motor - Models without Inverter Drive	16
Motor - Models with Inverter Drive	18
Inverter Drive	20
Drain Plumbing	22
Drain Valve - Normally Open	24
Drain Valve - Normally Closed	26
Door Lock - Models Through 12/31/87	28
Door Lock - Models Starting 1/1/88	30
Door	32
Door Handle (Drawing 1 of 2)	34
Door Handle (Drawing 2 of 2)	36
Control Panel - Micro-20	38
Control Panel - Sigma	40
Control Panel - PS40F	42
Control Panel - PC30	44
Control Panel - 10-Button Mechanical Timer (Drawing 1 of 2)	46
Control Panel - 10-Button Mechanical Timer (Drawing 2 of 2)	48
Control Panel - 5-Button Mechanical Timer Coin (Drawing 1 of 2)	50
Control Panel - 5-Button Mechanical Timer Coin (Drawing 2 of 2)	52
Electrical Component Mounting Plate - Mechanical Timer	54
Electrical Component Mounting Plate - PC30	56
Electrical Component Mounting Plate - Micro 20 and Sigma	58
Coin Meter and Coin Vault	60
Coin Meter (Drawing 1 of 2)	62
Coin Meter (Drawing 2 of 2)	64
Right Side, Front, Lower Rear and Top Panels	66
Left Side, Lower Front and Upper Back Panels	68
Upper Back Panel - Models Through 12/31/94	70
Upper Back Panel - Models Starting 1/1/95	72
Supply Dispenser - Models Through 12/31/92 with 1.5 Inch Supply Dispenser Hose	74
Supply Dispenser - Models Through 12/31/92 with 4 Inch Supply Dispenser Hose	76
Supply Dispenser - Models Through 12/31/94	78
Supply Dispenser - Models Starting 1/1/95	80

© Copyright 2014, Alliance Laundry Systems LLC

All rights reserved. No part of the contents of this book may be reproduced or transmitted in any form or by any means without the expressed written consent of the publisher.

Steam and Electric Heating Options 82
Soap Pump - Knight 84
Soap Pump - Brightwell 86
Parts Index 89

© Copyright, Alliance Laundry Systems LLC – DO NOT COPY or TRANSMIT

Parts Ordering Information

If literature or replacement parts are required, contact the source from whom the machine was purchased or contact Alliance Laundry Systems at (920) 748-3950 for the name and address of the nearest authorized parts distributor.

For technical assistance, call either of the numbers listed below:

(920) 748-3121 Ripon, Wisconsin

+32 56 41 20 54 Wevelgem, Belgium

Nameplate Location

When calling or writing about your product, be sure to mention model and serial numbers. Model and serial numbers are located on nameplate(s).

© Copyright, Alliance Laundry Systems LLC – DO NOT COPY or TRANSMIT

Notes

© Copyright, Alliance Laundry Systems LLC – DO NOT COPY or TRANSMIT

Model Identification

Information in this manual is applicable to these washer-extractor models:

CWE304AN2
CWE304MC2
CWE304MD2
CWE304ME2
CWE304ML2
CWE304MN2
CWE304MX2
CWE304MY2

IWE075AN2
IWE075MC2
IWE075MN2
IWE075MX2
IWE304AN2
IWE304MC2
IWE304MD2
IWE304ME2
IWE304ML2
IWE304MN2
IWE304MX2
IWE304MY2
IWE304SC2
IWE304SD2
IWE304SE2
IWE304SL2
IWE304SR2
IWE304SX2
IWE304SY2

WE304_CAM-TIMER
WE304_MICRO-20
WE304_PC30
WE304_PS40F
WE304_SIGMA

© Copyright, Alliance Laundry Systems LLC – DO NOT COPY or TRANSMIT

Washer-Extractor Product Overview

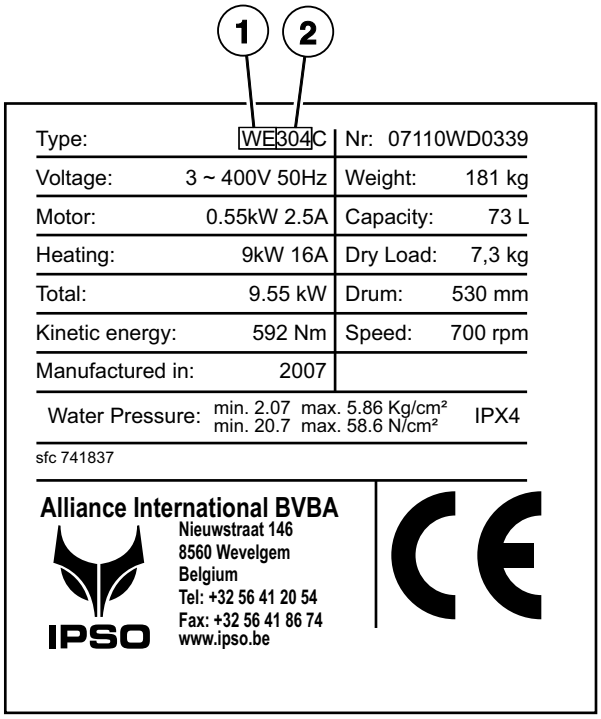

Label 1

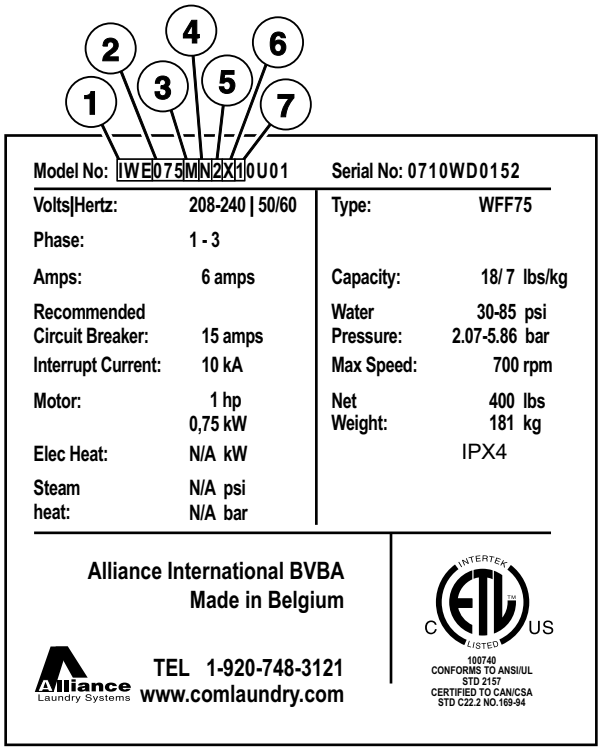

Label 2

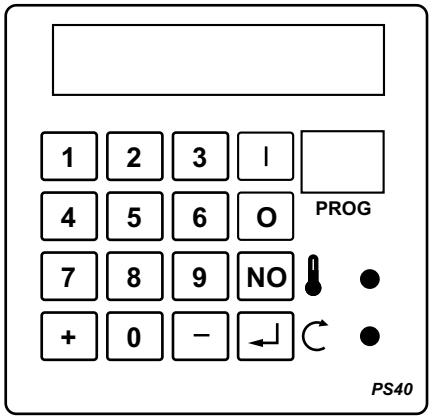

PS40

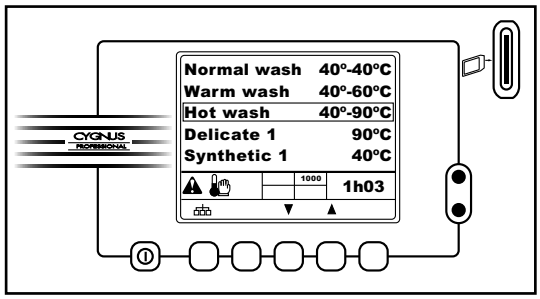

Cygnus Professional

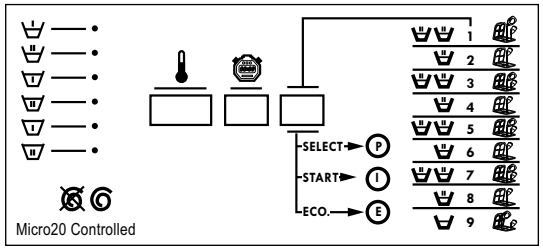

Micro 20

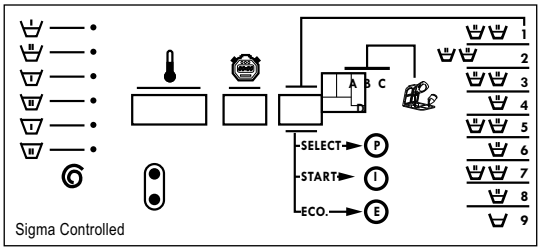

Sigma

CHM1779P_D0245

© Copyright, Alliance Laundry Systems LLC – DO NOT COPY or TRANSMIT

Washer-Extractor Product Overview

REF	PART NO.	DESCRIPTION	COMMENTS
1	-	Product Family	CWE IWE WE
2	-	Capacity	075 304
3	-	Control	A (PS40F) CAM-Timer M (Micro-20) PC30 S (Sigma)
4	-	Actuation	C (Coin Drop Meter) D (Dual Coin Drop) E (Electronic Drop) L (Prep for Remote or Central Pay) N (Non-Coin) R (Smart Card Relay) X (Prep for Coin) Y (Card Ready)
5	-	Speed	2 (Normal Spin)
6	-	Voltage	N (440-480/50-60/3/3) P (380-415/50-60/3/3) Q (208-240/50-60/3/3) X (200-240/50-60/1/3)
7	-	Design	1

© Copyright, Alliance Laundry Systems LLC – DO NOT COPY or TRANSMIT

Frame

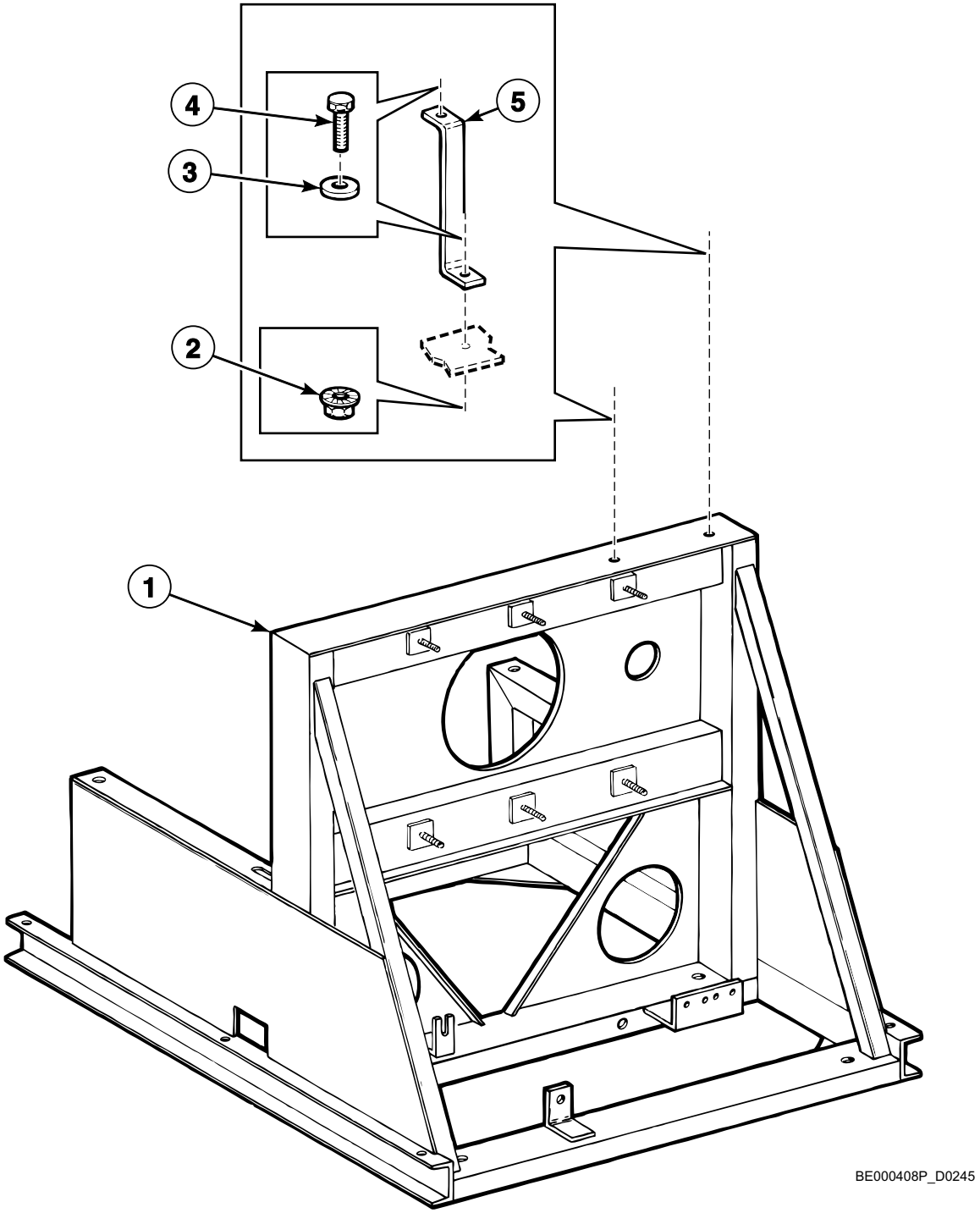

© Copyright, Alliance Laundry Systems LLC – DO NOT COPY or TRANSMIT

Frame

REF	PART NO.	DESCRIPTION	COMMENTS
1	130/00002/00	Frame	
2	206/00101/00	Nut	
3	201/00007/00	Washer	
4	206/00013/00	Bolt	
5	111/00076/00	Assembly Plate	

© Copyright, Alliance Laundry Systems LLC – DO NOT COPY or TRANSMIT

Bearing Housing

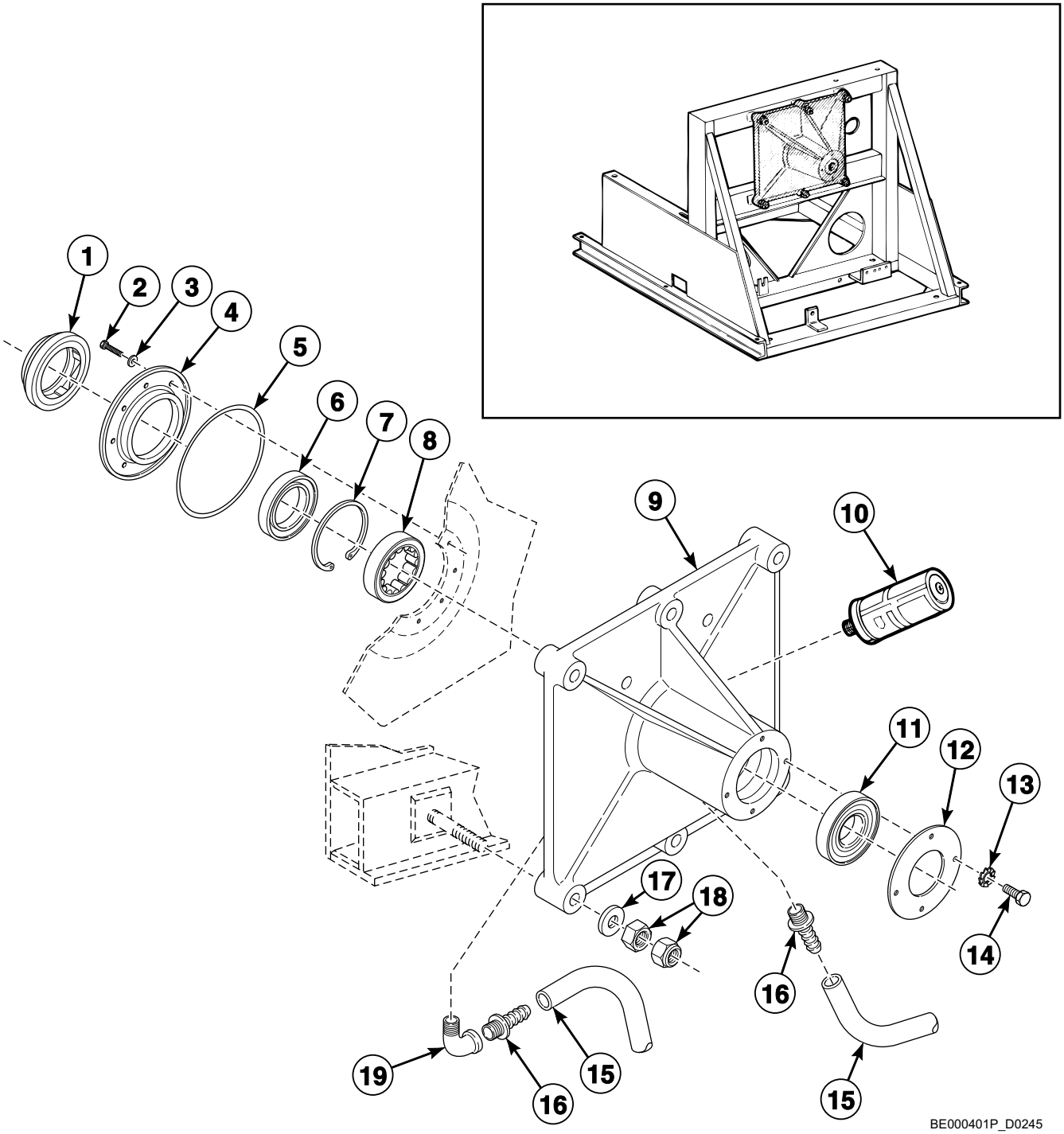

© Copyright, Alliance Laundry Systems LLC – DO NOT COPY or TRANSMIT

Bearing Housing

REF	PART NO.	DESCRIPTION	COMMENTS
	387P3	Bearing Tool Kit	
	KBRGWE304	Bearing Kit	Includes items 1-3, 5-8, 10, 11, 13, 14, 223/00008/00 Counter Ring, F8388601P Deflector Inlet and 223/00242/50 Front Panel Gasket
	KBRGWE304WB	Bearing Kit	Includes items 1-3, 5-7, 10, 13, 14, 223/00008/00 Counter Ring, F8388601P Deflector Inlet and 223/00242/50 Front Panel Gasket
1	231/00037/00	Shaft Seal	
2	205/00104/00	Bolt	
3	201/00202/00	Washer	
4	131/00035/01	Seal Holder Assembly	
5	231/00036/00	O-Ring	
6	212/00007/00	Grease Ring	
7	212/00006/00	Retainer Ring	
8	212/00005/00	Roller Bearing	
9	212/00001/01	Bearing Housing Assembly	
10	212/00002/00	Lubricator	
11	212/00004/00	Ball Bearing	
12	112/00003/00	Bearing Cover	
13	203/00003/00	Washer	
14	206/00010/00	Bolt	
15	212/00010/00	Grease Pipe	
16	212/00011/00	Connector	
17	201/00001/00	Washer	
18	204/00012/00	Nut	
19	212/00012/00	Elbow	

© Copyright, Alliance Laundry Systems LLC – DO NOT COPY or TRANSMIT

Shell and Basket

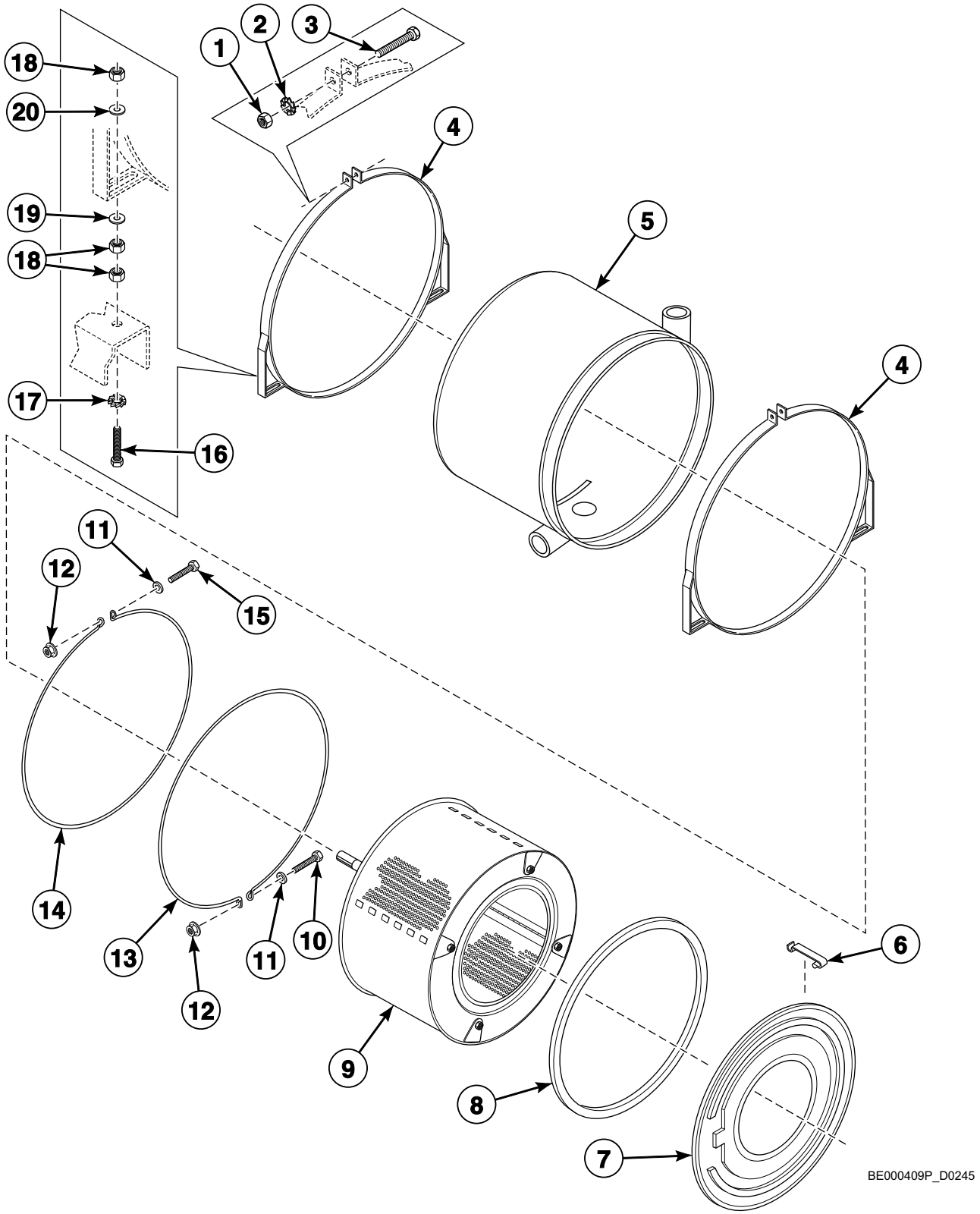

© Copyright, Alliance Laundry Systems LLC – DO NOT COPY or TRANSMIT

Shell and Basket

REF	PART NO.	DESCRIPTION	COMMENTS
1	204/00003/00	Nut	
2	203/00002/00	Washer	
3	206/00030/00	Bolt	
4	131/00005/00	Tub Fastening Ring	
5	119/10208/00	Tub	Boiler heat; Models starting 1/1/95
	B12330501	Tub	Electric and steam heat; Models starting 1/1/95
	119/10210/00	Tub	Steam heat; Models starting 1/1/95
	131/00013/00	Tub	Electric heat; Models through 12/31/94
	131/00045/00	Tub	Boiler and steam heat; Models through 12/31/94
6	217/00008/00	Tub Front Panel Clip	
7	131/00002/00	Front Panel	
8	231/00001/00	Tub Front Gasket	
9	132/10006/00	Drum and Axle	
	132/00007/00	Drum and Axle	
10	206/00034/00	Bolt	
11	201/00007/00	Washer	
12	206/00101/00	Nut	
13	231/00009/00	Safety Ring Tub Clip	
14	231/00010/00	Tub Front Ring Clamp	
15	206/00012/00	Bolt	
16	206/00029/00	Bolt	
17	203/00001/00	Washer	
18	204/00002/00	Nut	
19	201/00004/00	Washer	
20	201/00009/00	Washer	

© Copyright, Alliance Laundry Systems LLC – DO NOT COPY or TRANSMIT

Basket, Pulley and Belt

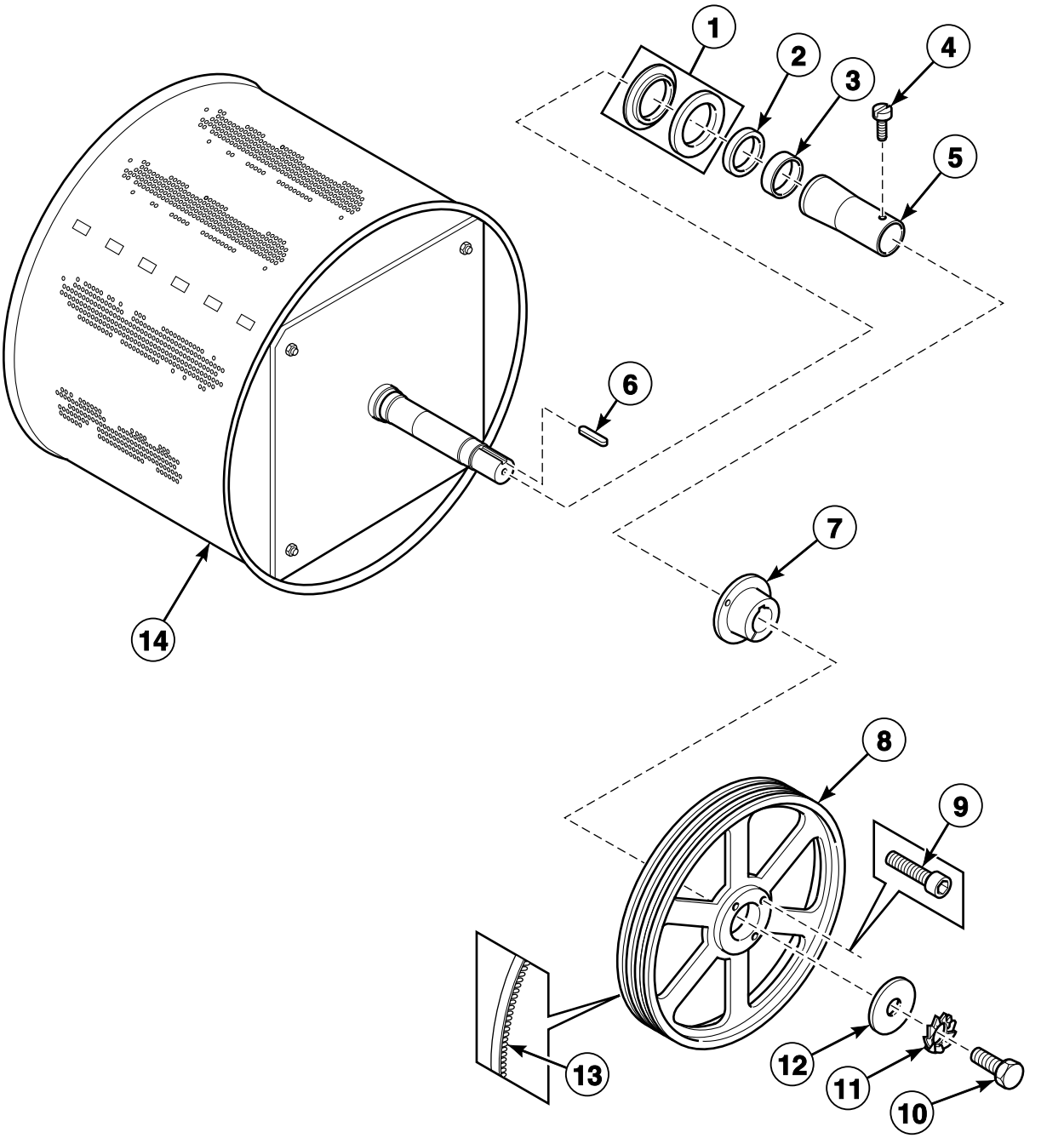

BE000445P_D0245

© Copyright, Alliance Laundry Systems LLC – DO NOT COPY or TRANSMIT

Basket, Pulley and Belt

REF	PART NO.	DESCRIPTION	COMMENTS
1	232/00008/00	Counter Ring	
2	132/00009/00	Shaft Seal	
3	212/00005/00	Roller Bearing	
4	207/00004/00	Screw	
5	232/00020/00	Bearing Spacer	
6	212/00026/00	Key	
7	212/00009/01	Pulley Hub	
8	212/00009/00	Pulley	
9	206/00053/00	Screw	
10	206/00004/00	Bolt	
11	203/00001/00	Washer	
12	201/00011/00	Washer	
13	212/00014/00	Belt	Models without an inverter drive
	226/00028/00	Belt	Models with an inverter drive
14	239/00005/01W	Pipe Clip	

© Copyright, Alliance Laundry Systems LLC – DO NOT COPY or TRANSMIT

Motor - Models without Inverter Drive

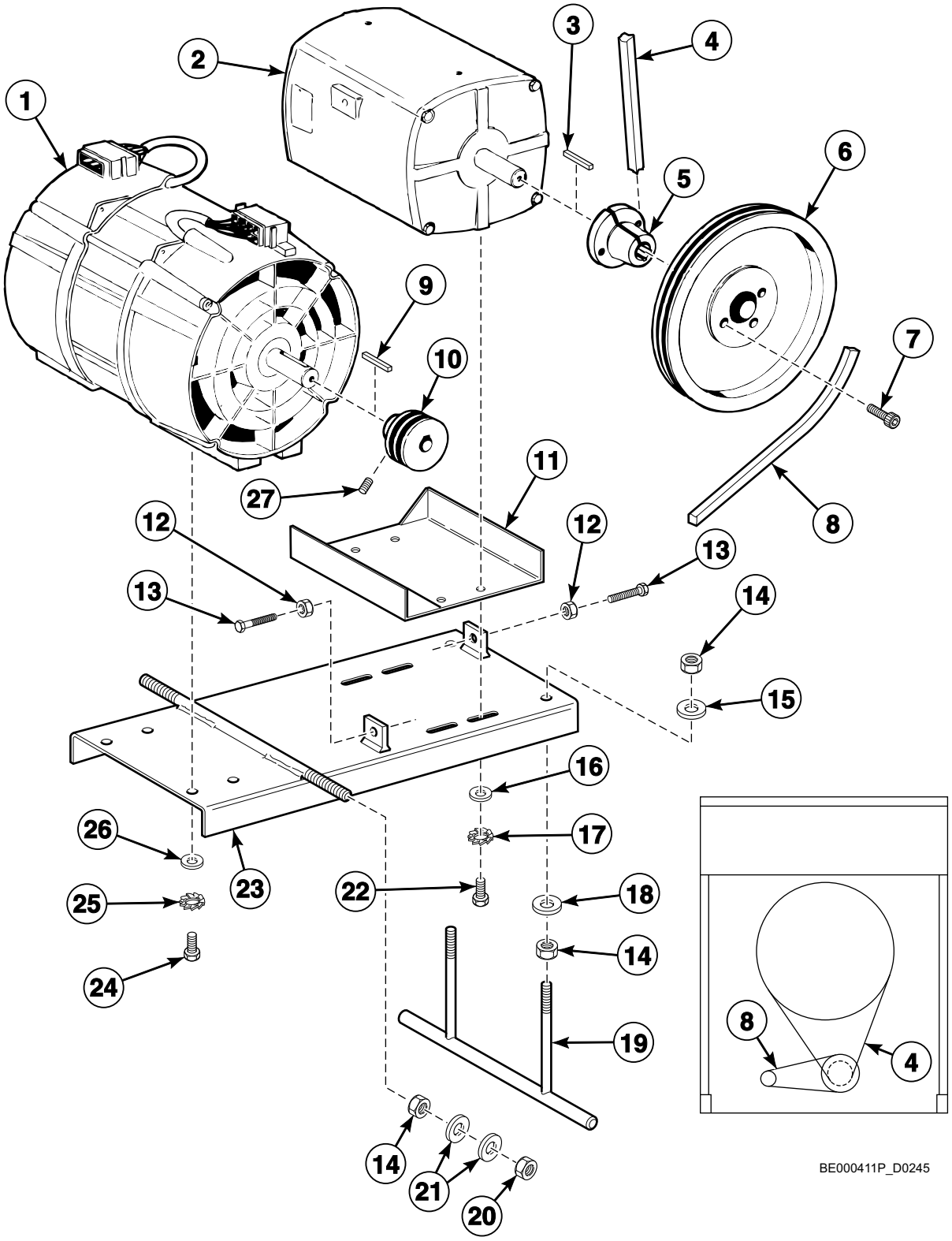

© Copyright, Alliance Laundry Systems LLC – DO NOT COPY or TRANSMIT

Motor - Models without Inverter Drive

REF	PART NO.	DESCRIPTION	COMMENTS
1	234/00003/00	Motor	208-240 Volt/60 Hertz/3 Phase
	234/00001/00	Motor	220-380 Volt/50 Hertz/3 Phase
	234/00004/00	Motor	220-380 Volt/60 Hertz/3 Phase
	234/00002/00	Motor	400-440 Volt/50 Hertz
2	234/00013/00	Motor	208-240 Volt/60 Hertz
	234/00011/00	Motor	220-380 Volt/50 Hertz
	234/00014/00	Motor	220-380 Volt/60 Hertz
	234/00012/00	Motor	400-440 Volt/50 Hertz
3	212/00015/00	Key Clip	
4	212/00014/00	Belt	
5	212/00016/01	Pulley Hub	
6	212/00016/00	Pulley	50 Hertz
	212/00017/00	Pulley	60 Hertz
7	212/00016/02	Screw	
8	226/00112/00	Belt	
9	227/00127/01	Motor Key	
10	212/00019/00	Pulley	
11	134/00021/00	Motor Plate	
12	204/00003/00	Nut	
13	206/00037/00	Bolt	
14	204/00002/00	Nut	
15	201/00006/00	Washer	
16	201/00010/00	Washer	
17	203/00002/00	Washer	
18	201/00005/00	Washer	
19	112/00021/00	Clamp	
20	204/00001/00	Nut	
21	201/00004/00	Washer	
22	206/00006/00	Bolt	
23	112/00022/00	Motor Plate	
24	206/00010/00	Bolt	
25	203/00003/00	Washer	
26	202/00002/00	Washer	
27	206/00031/00	Screw	

© Copyright, Alliance Laundry Systems LLC – DO NOT COPY or TRANSMIT

Motor - Models with Inverter Drive

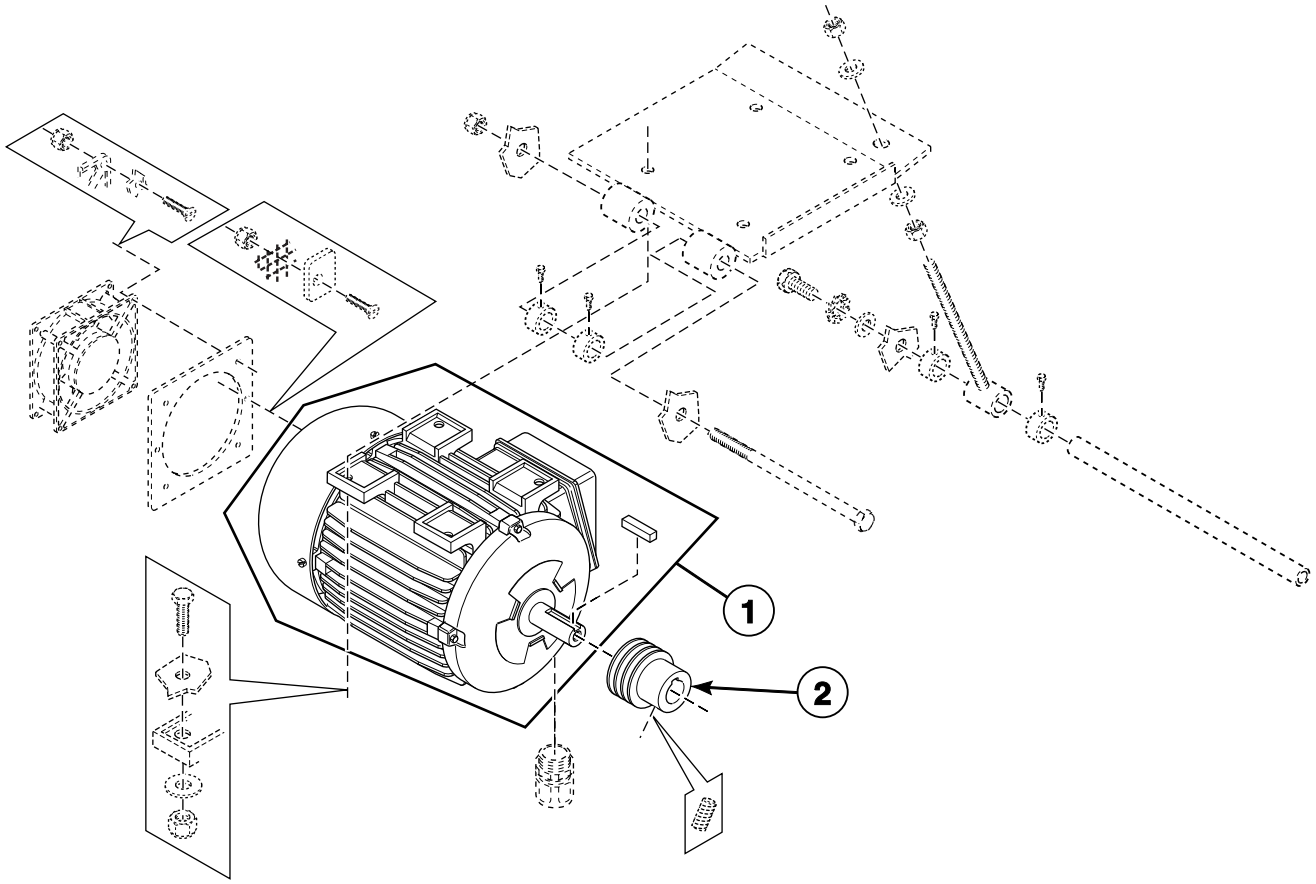

BE000369AP_D0245

© Copyright, Alliance Laundry Systems LLC – DO NOT COPY or TRANSMIT

Motor - Models with Inverter Drive

REF	PART NO.	DESCRIPTION	COMMENTS
1	B12510901	Motor	
2	226/00092/00	Pulley	208-240 Volt/60 Hertz

© Copyright, Alliance Laundry Systems LLC – DO NOT COPY or TRANSMIT

Inverter Drive

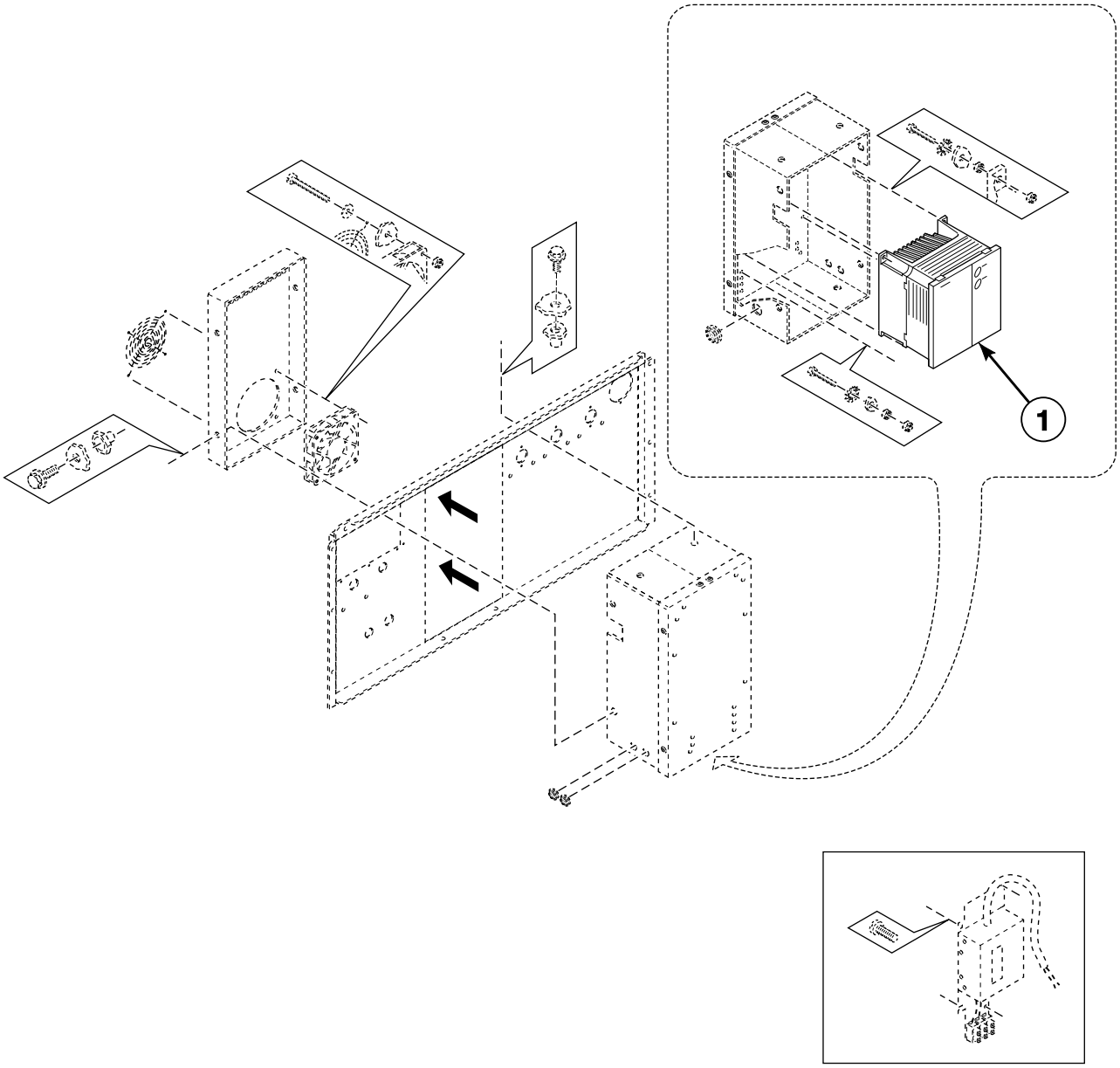

BE000371P_D0245

© Copyright, Alliance Laundry Systems LLC – DO NOT COPY or TRANSMIT

Inverter Drive

REF	PART NO.	DESCRIPTION	COMMENTS
1	F8421213	Inverter Drive Kit	208 Volt/1 Phase; Used to convert from 500 series to 700 series drive
	F8421214	Inverter Drive Kit	400 Volt/3 Phase; Used to convert from 500 series to 700 series drive
	F8421313	Inverter Drive	208 Volt/3 Phase; 700 series drive
	F8421314	Inverter Drive	400 Volt/3 Phase; 700 series drive

© Copyright, Alliance Laundry Systems LLC – DO NOT COPY or TRANSMIT

Drain Plumbing

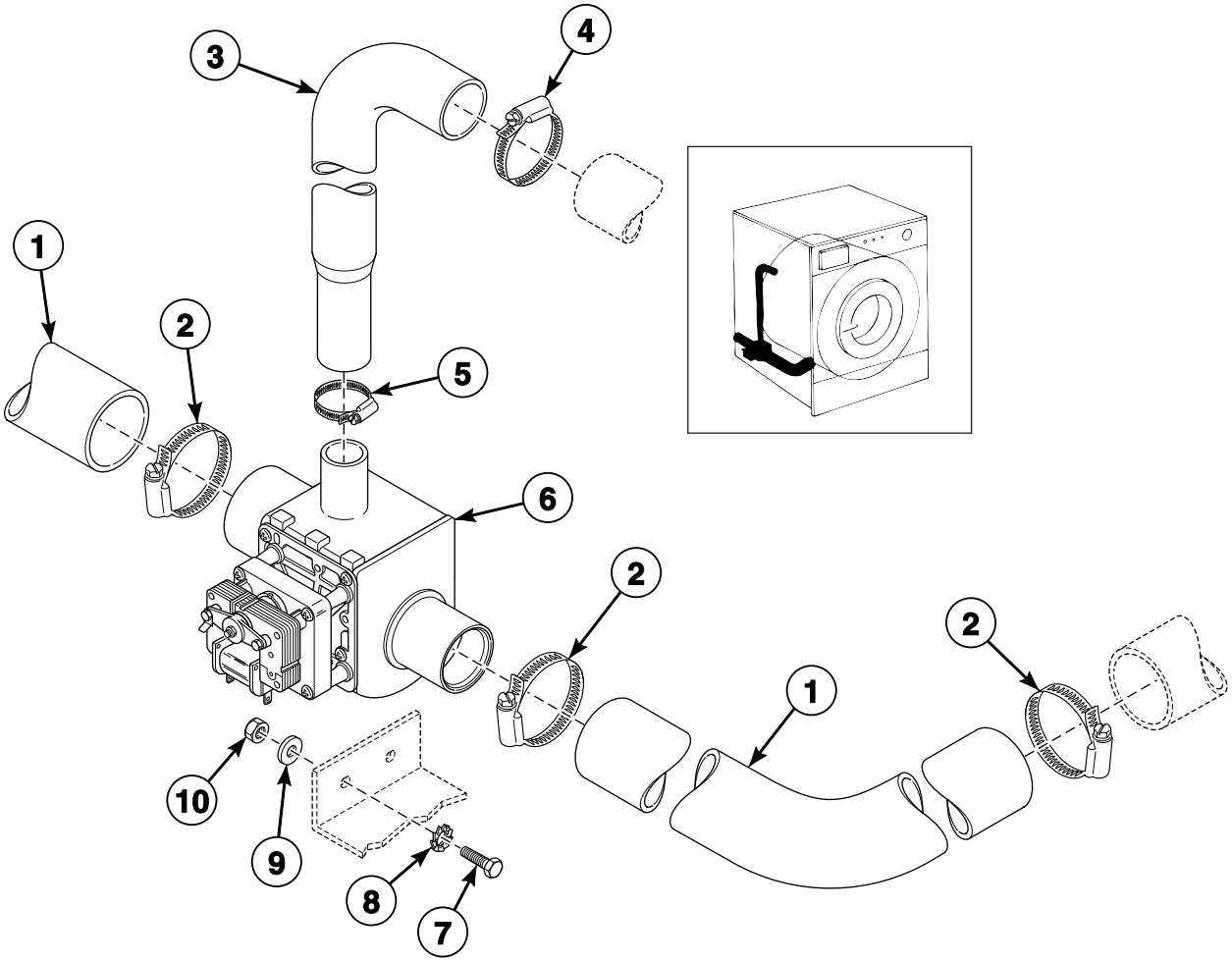

BE000412P_D0245

© Copyright, Alliance Laundry Systems LLC – DO NOT COPY or TRANSMIT

Drain Plumbing

REF	PART NO.	DESCRIPTION	COMMENTS
1	223/00056/00	Drain Elbow	
2	223/00057/00	Clamp	
3	223/00131/00	Overflow Hose	
4	223/00013/00	Hose Clamp	
5	223/00011/00	Hose Clamp	
6	209/00075/00	Drain Valve	NO
	209/00171/00	Drain Valve	NC
7	206/00010/00	Bolt	
8	203/00003/00	Washer	
9	202/00002/00	Washer	
10	204/00004/00	Nut	

© Copyright, Alliance Laundry Systems LLC – DO NOT COPY or TRANSMIT

Drain Valve - Normally Open

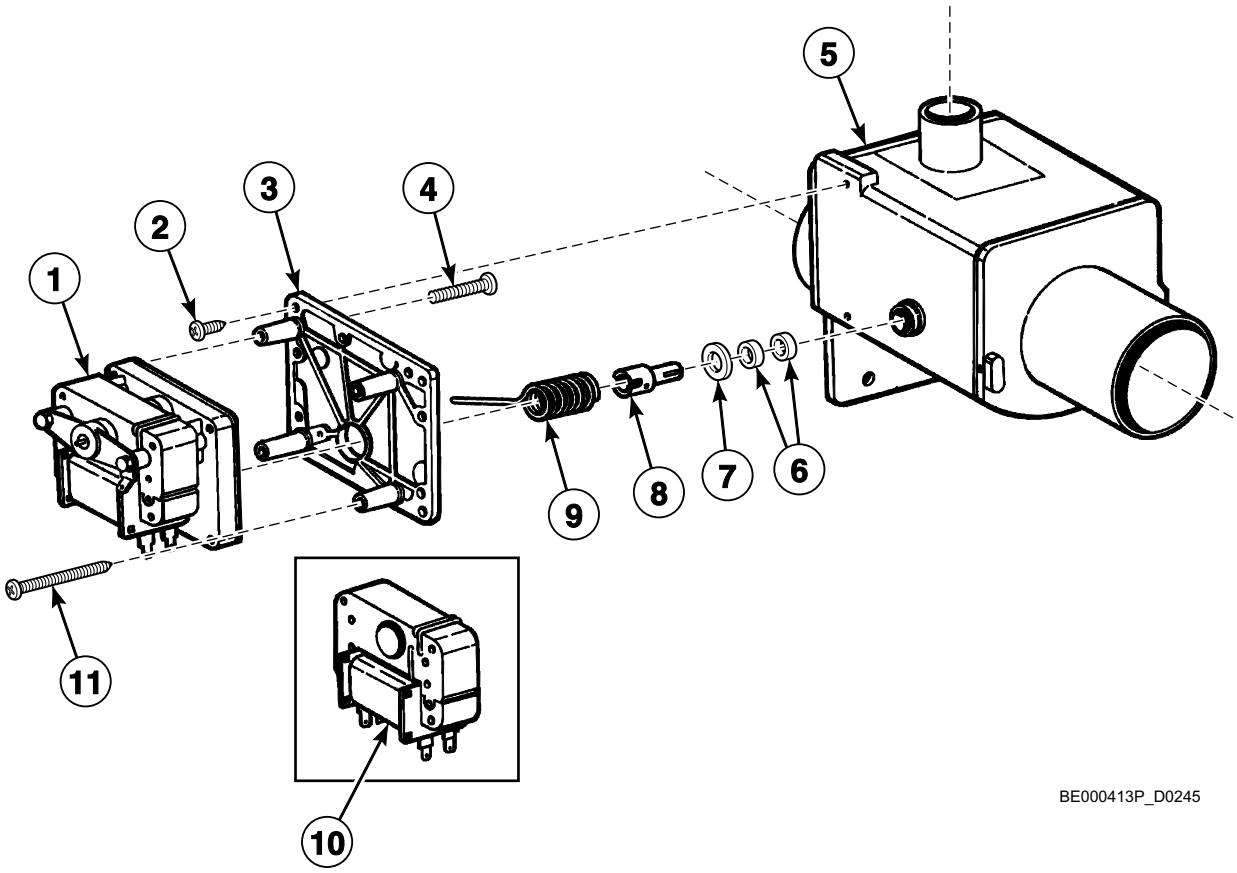

© Copyright, Alliance Laundry Systems LLC – DO NOT COPY or TRANSMIT

Drain Valve - Normally Open

REF	PART NO.	DESCRIPTION	COMMENTS
1	209/00203/11	Drain Valve Motor	24 Volt
	209/00052/11	Drain Valve Motor	110 Volt/60 Hertz
	209/00051/11	Drain Valve Motor	220 Volt/50 or 60 Hertz
2	209/00170/05	Screw	
3	209/00025/07	Drain Valve Motor Mounting Plate	
4	209/00025/08	Screw	
5	209/00075/05	Drain Valve	
6	209/00025/10	Drain Valve Shaft Seal	
7	209/00025/12	Washer	
8	209/00170/10	Drain Valve Shaft	
9	209/00025/13	Drain Valve Spring	
10	209/00203/21	Coil	24 Volt
	209/00052/21	Coil	115 Volt/60 Hertz
	209/00051/21	Coil	220 Volt/50 or 60 Hertz
11	209/00170/07	Screw	

© Copyright, Alliance Laundry Systems LLC – DO NOT COPY or TRANSMIT

Drain Valve - Normally Closed

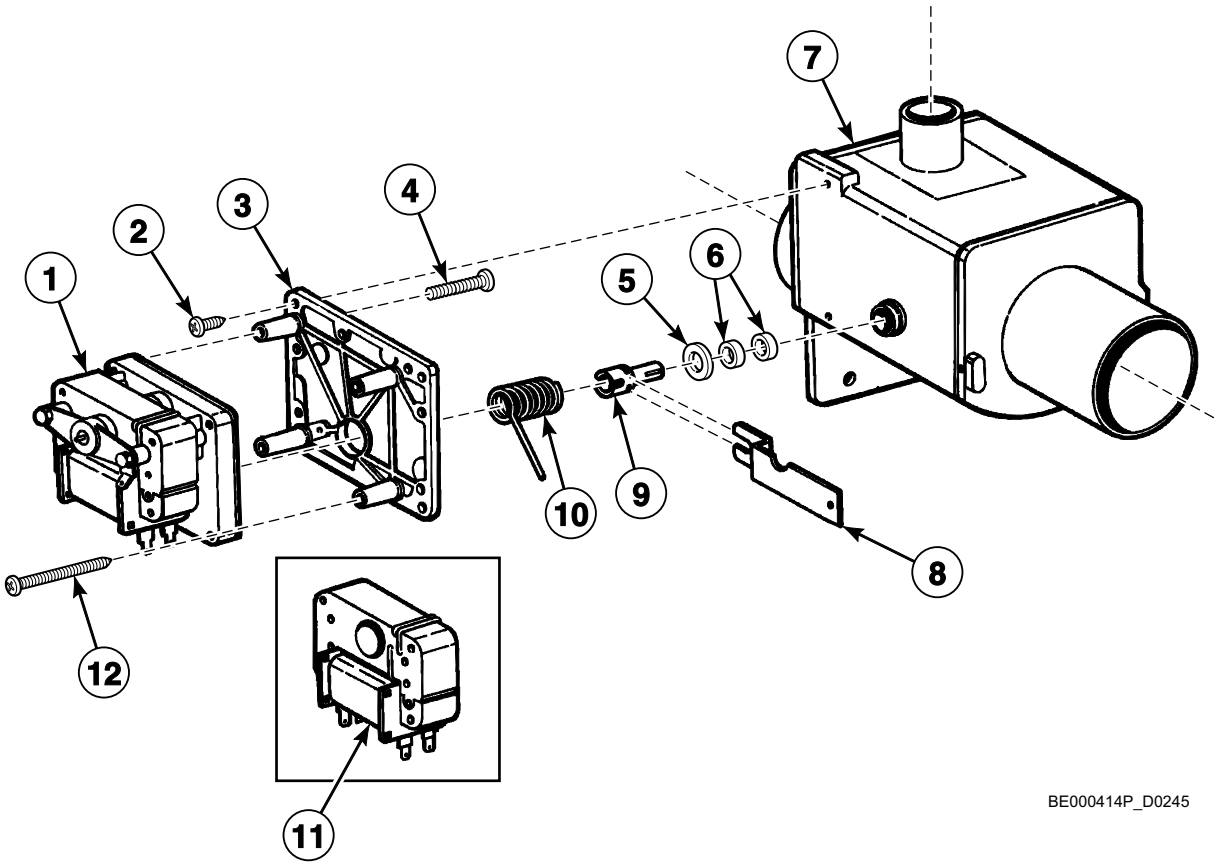

© Copyright, Alliance Laundry Systems LLC – DO NOT COPY or TRANSMIT

Drain Valve - Normally Closed

REF	PART NO.	DESCRIPTION	COMMENTS
1	209/00203/12	Drain Valve Motor	24 Volt
	209/00052/12	Drain Valve Motor	110 Volt/60 Hertz
	209/00170/06	Drain Valve Motor Assembly	220 Volt/50 or 60 Hertz
2	209/00170/05	Screw	
3	209/00115/04	Drain Valve Motor Mounting Plate	
4	209/00025/08	Screw	
5	209/00025/12	Washer	
6	209/00025/10	Drain Valve Shaft Seal	
7	209/00075/05	Drain Valve	
8	209/00115/11	Drain Valve Handle	
9	209/00170/10	Drain Valve Shaft	
10	209/00170/02	Drain Valve Spring	
11	209/00203/21	Coil	24 Volt
	209/00052/21	Coil	115 Volt/60 Hertz
	209/00051/21	Coil	220 Volt/50 or 60 Hertz
12	209/00170/07	Screw	

© Copyright, Alliance Laundry Systems LLC – DO NOT COPY or TRANSMIT

Door Lock - Models Through 12/31/87

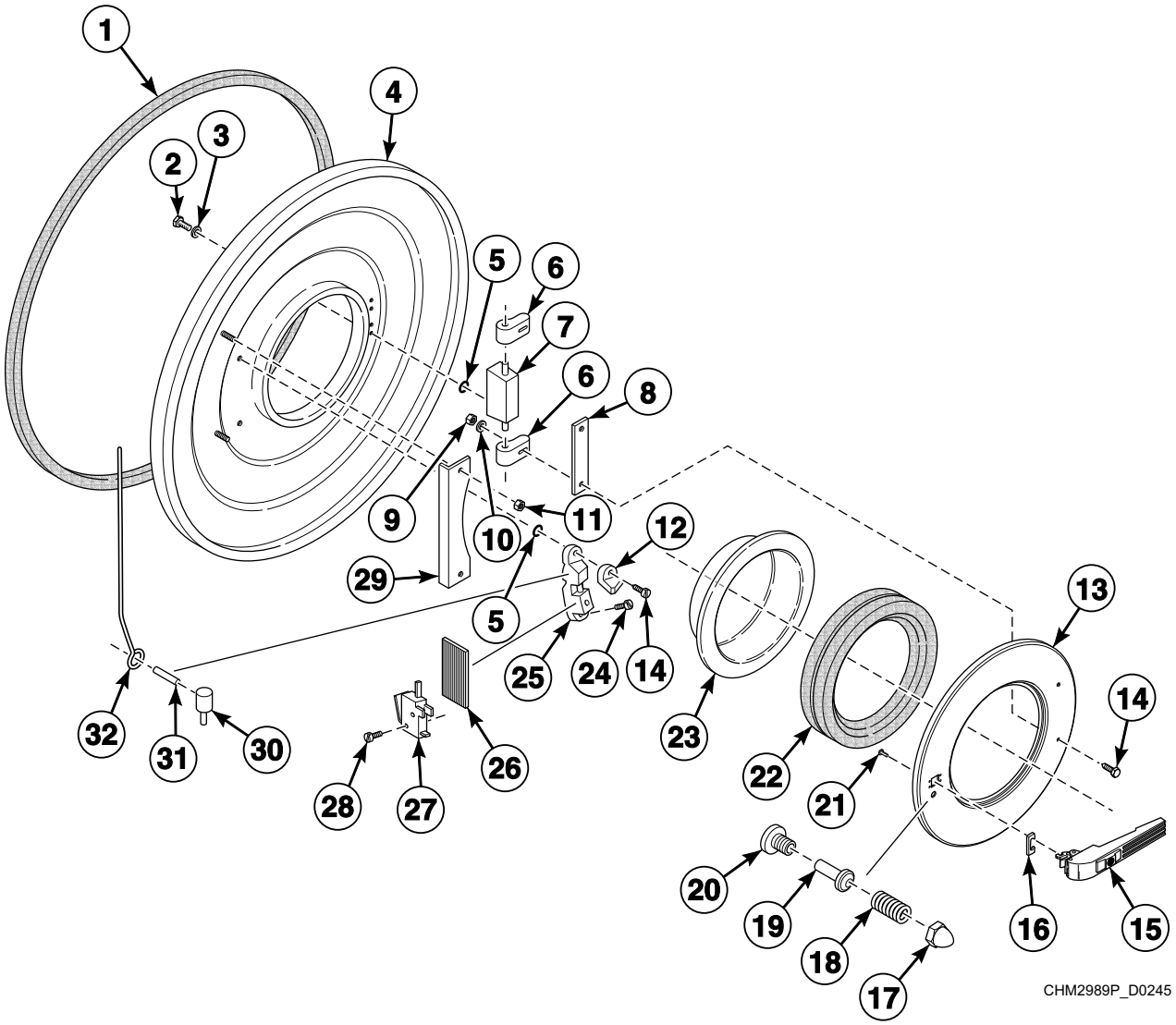

© Copyright, Alliance Laundry Systems LLC – DO NOT COPY or TRANSMIT

Door Lock - Models Through 12/31/87

REF	PART NO.	DESCRIPTION	COMMENTS
1	223/00242/00	Tub Front Gasket	
2	205/00104/00	Bolt	
3	202/00101/00	Washer	
4	138/00001/00	Tub Front	
5	217/00021/00	O-Ring	
6	217/00009/02	Door Hinge Assembly	
7	217/00009/01	Door Hinge	
8	117/00010/00	Door Hinge Spacer	
9	204/00106/00	Nut	
10	202/00003/00	Washer	
11	204/00009/00	Nut	
12	217/00017/02	Protection Block	
13	118/00125/00	Door	
14	207/00102/00	Screw	
15	217/00055/00	Door Handle	
16	217/00016/00	Door Handle Stop	
17	204/00103/00	Nut	
18	217/00020/00	Spring	
19	211/00105/00	Pin	
20	217/00019/00	Holder	
21	B12500801	Screw	
22	223/00068/00	Door Glass Seal	
23	B12449801	Door Glass	
24	207/00103/00	Screw	
25	217/00017/00	Door Lock Assembly	
26	217/00038/00	Insulation Plate	
27	209/00023/00	Door Switch	
28	207/00109/00	Screw	
29	N/A	Door Interlock System Protection Plate	
30	224/00003/00	Interlock Pin	
31	208/00004/00	Pin	
32	N/A	Wire Bridge	

N/A = Part no longer available

© Copyright, Alliance Laundry Systems LLC – DO NOT COPY or TRANSMIT

Door Lock - Models Starting 1/1/88

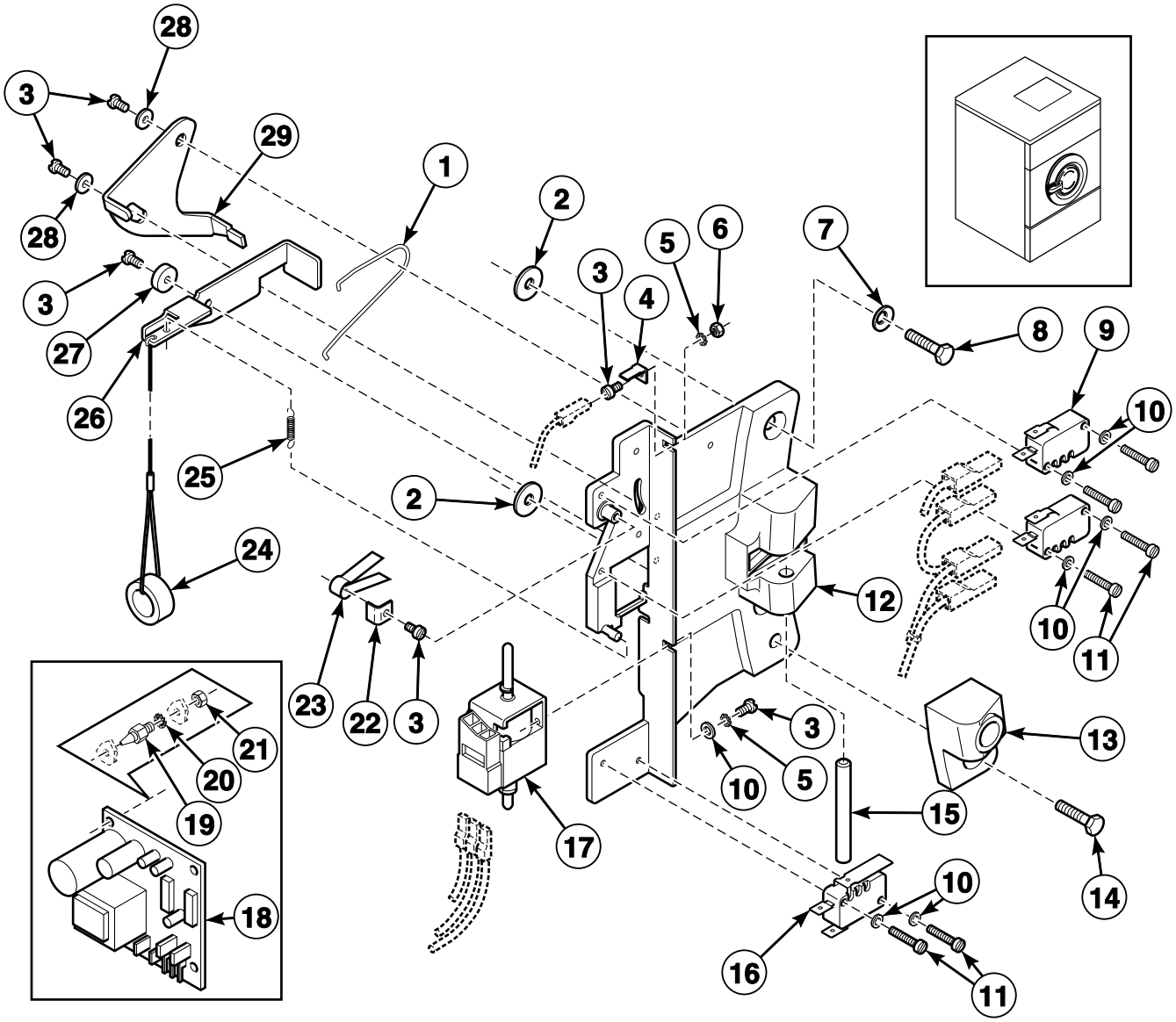

BE000059AP_D0245

© Copyright, Alliance Laundry Systems LLC – DO NOT COPY or TRANSMIT

Door Lock - Models Starting 1/1/88

REF	PART NO.	DESCRIPTION	COMMENTS
1	224/00040/00	Lever Spring	
2	217/00021/00	O-Ring	
3	207/00135/00	Screw	
4	210/10015/00	Ground Terminal	
5	203/00007/00	Washer	
6	204/00008/00	Nut	
7	203/00010/00	Washer	
8	207/00103/00	Screw	
9	209/00272/00	Door Lock Microswitch	
10	201/00018/00	Washer	
11	207/00009/00	Screw	
12	217/00052/01A	Door Lock Assembly	
13	217/00052/02	Door Lock Pin Kit	
14	207/00102/00	Screw	
15	217/00017/03	Lock Shaft	
16	209/00273/00	Light Microswitch	
17	209/00274/00	Door Lock Solenoid	
18	209/00275/04	Door Lock Board	
19	211/00120/00	Standoff	
20	203/00006/00	Washer	
21	204/00007/00	Nut	
22	217/00052/08	Washer	
23	224/00049/00	Door Lock Spring	
24	224/00015/00	Door Latch Cord	
25	224/00043/00	Interlock Coil Spring	
26	217/00052/04	Interlock Lever	
27	217/00052/03	Door Lock Spacer	
28	201/00017/00	Washer	
29	217/00052/05	Switch Lever	

© Copyright, Alliance Laundry Systems LLC – DO NOT COPY or TRANSMIT

Door

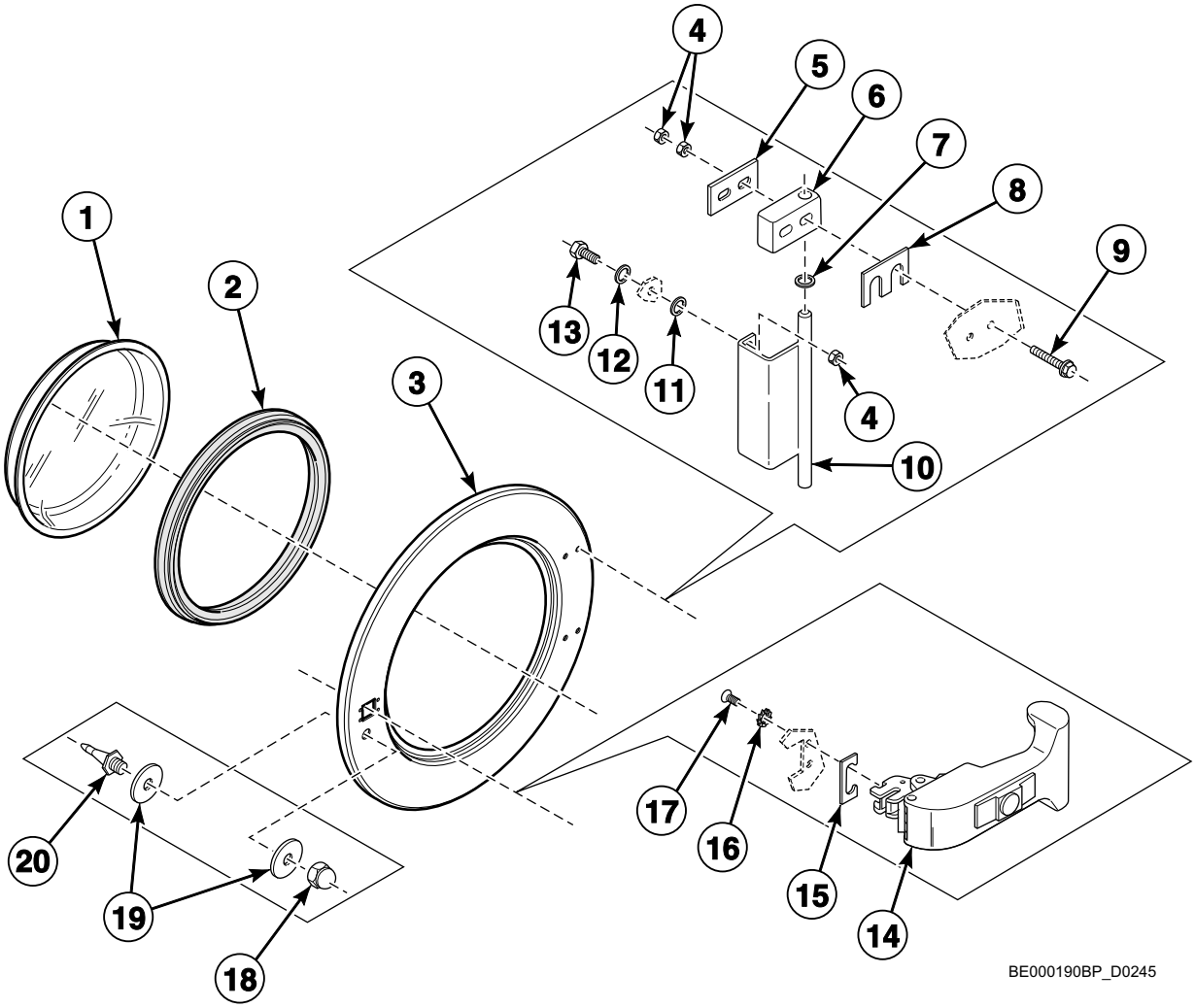

© Copyright, Alliance Laundry Systems LLC – DO NOT COPY or TRANSMIT

Door

REF	PART NO.	DESCRIPTION	COMMENTS
1	B12449801	Door Glass	
2	223/00068/00	Door Glass Seal	
3	118/00125/00	Door	
4	204/00106/00	Nut	
5	111/00003/00	Door Hinge Plate Assembly	
6	253/00022/00	Door Hinge Block	
7	202/00104/00	Washer	
8	118/00122/00	Door Hinge Spacer	1.5 mm
	118/00124/00	Door Hinge Spacer	2 mm
9	207/00126/00	Screw	
10	131/00046/00	Hinge	
11	217/00021/00	O-Ring	
12	202/00101/00	Washer	
13	205/00104/00	Bolt	
14	217/00051/00	Door Handle	
15	217/00016/00	Door Handle Stop	
16	203/00008/00	Washer	
17	207/00020/00	Screw	
18	204/00103/00	Nut	
19	202/00111/00	Washer	
20	211/00109/01	Door Lock Pin Kit	

© Copyright, Alliance Laundry Systems LLC – DO NOT COPY or TRANSMIT

Door Handle (Drawing 1 of 2)

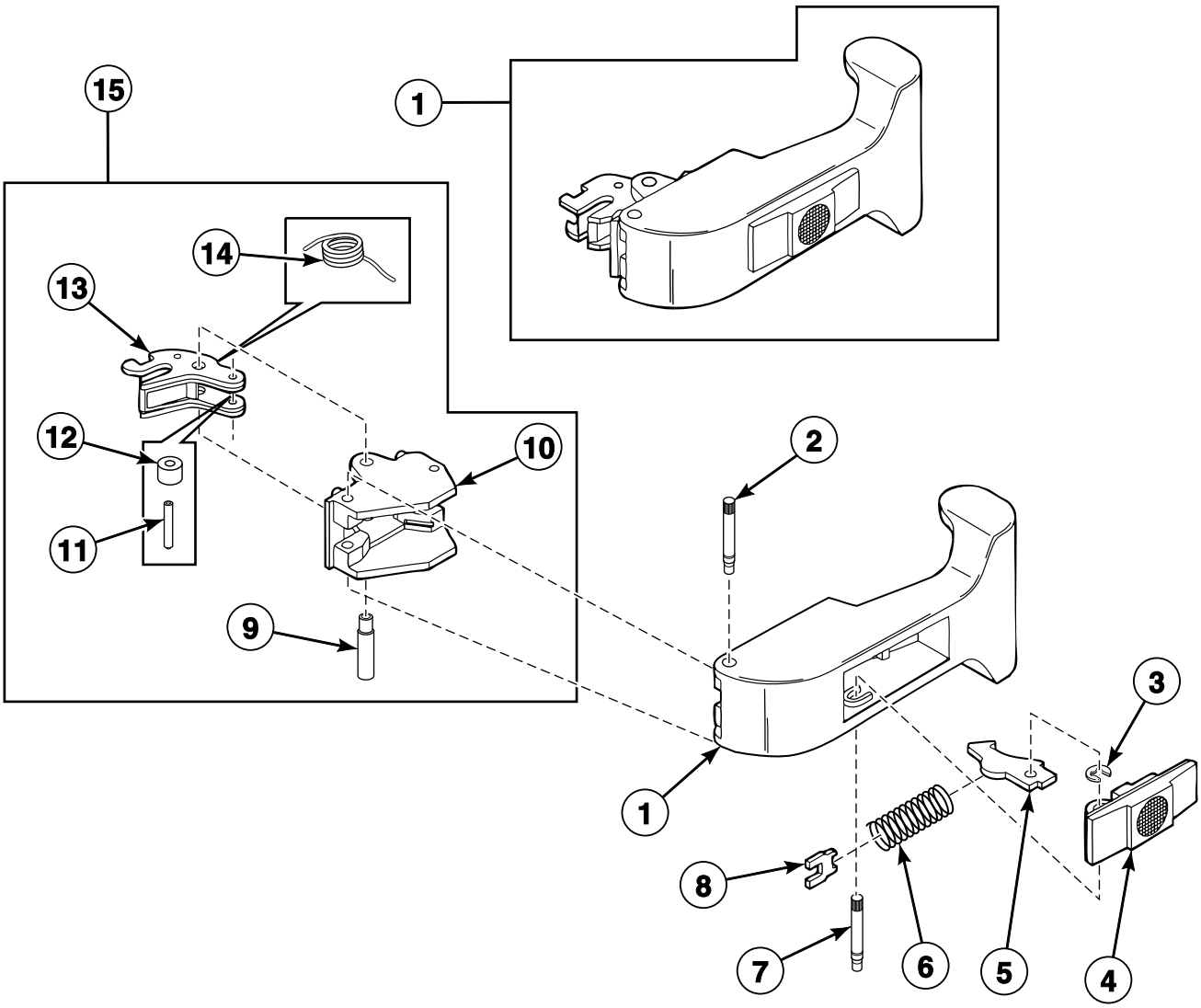

BE000034AP_D0245

© Copyright, Alliance Laundry Systems LLC – DO NOT COPY or TRANSMIT

Door Handle (Drawing 1 of 2)

REF	PART NO.	DESCRIPTION	COMMENTS
1	217/00051/00	Door Handle	
2	217/00013/09	Door Mounting Pin	
3	217/00013/11	Door Circlip	
4	217/00013/12	Door Handle	
5	217/00013/13	Door Handle Hook	
6	217/00013/14	Door Handle Spring	
7	217/00013/15	Door Handle Locking Pin	
8	217/00013/16	Door Handle Assembly Plate	
9	217/00013/08	Door Locking Pin	
10	217/00013/07	Door Locking Grip	
11	217/00013/05	Door Axle Roller	
12	217/00013/06	Door Roller	
13	217/00013/04	Door Handle Latch	
14	217/00013/03	Door Lock Spring	
15	217/00051/14	Door Handle Latch	

© Copyright, Alliance Laundry Systems LLC – DO NOT COPY or TRANSMIT

Door Handle (Drawing 2 of 2)

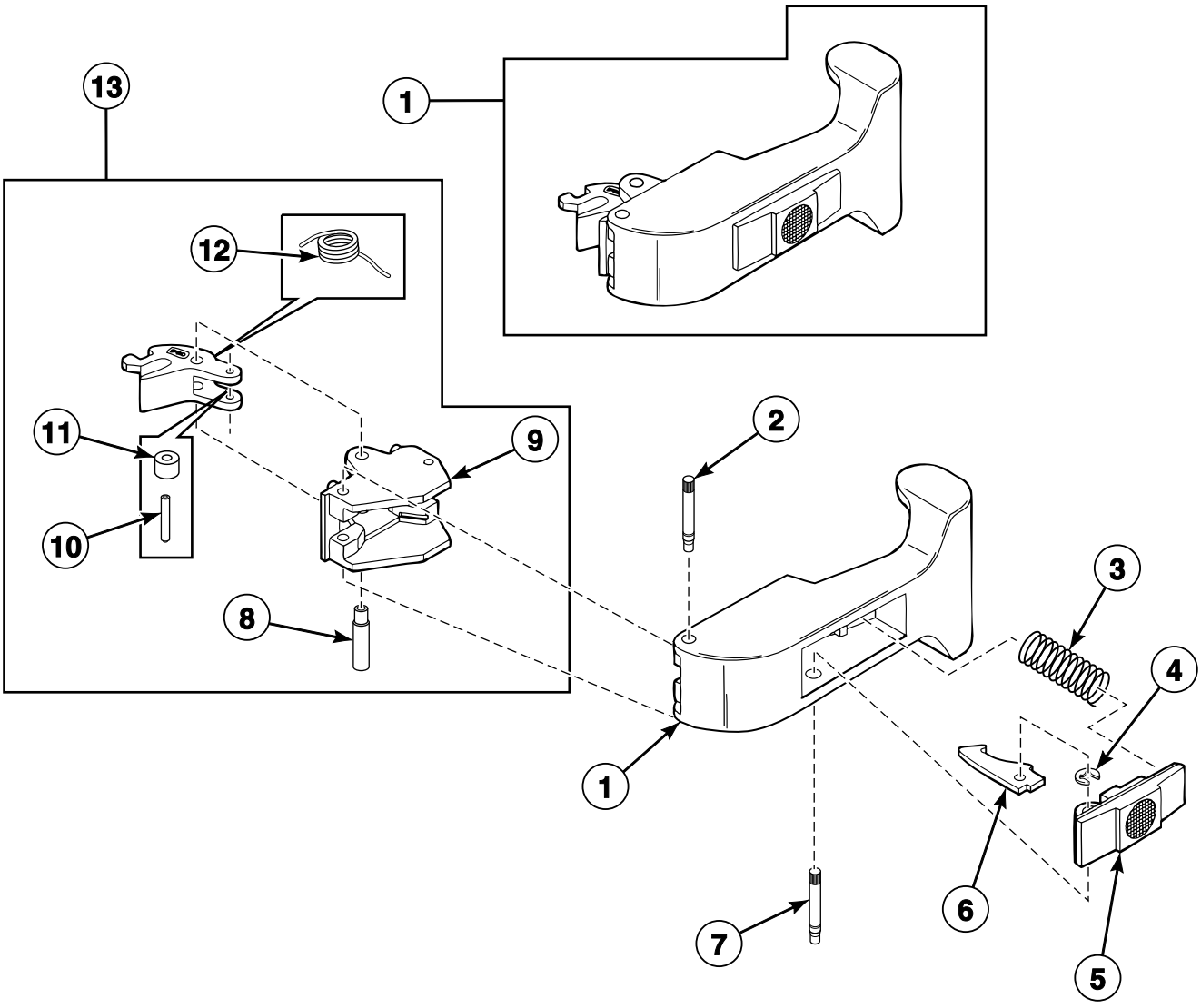

BE000034BP_D0245

© Copyright, Alliance Laundry Systems LLC – DO NOT COPY or TRANSMIT

Door Handle (Drawing 2 of 2)

REF	PART NO.	DESCRIPTION	COMMENTS
1	217/00051/00	Door Handle	
2	217/00013/09	Door Mounting Pin	
3	217/00013/14	Door Handle Spring	
4	217/00013/11	Door Circlip	
5	217/00013/12	Door Handle	
6	217/00051/13	Door Handle Catch	
7	217/00051/15	Door Locking Pin	
8	217/00013/08	Door Locking Pin	
9	217/00013/07	Door Locking Grip	
10	217/00013/05	Door Axle Roller	
11	217/00013/06	Door Roller	
12	217/00013/03	Door Lock Spring	
13	217/00051/14	Door Handle Latch	

© Copyright, Alliance Laundry Systems LLC – DO NOT COPY or TRANSMIT

Control Panel - Micro-20

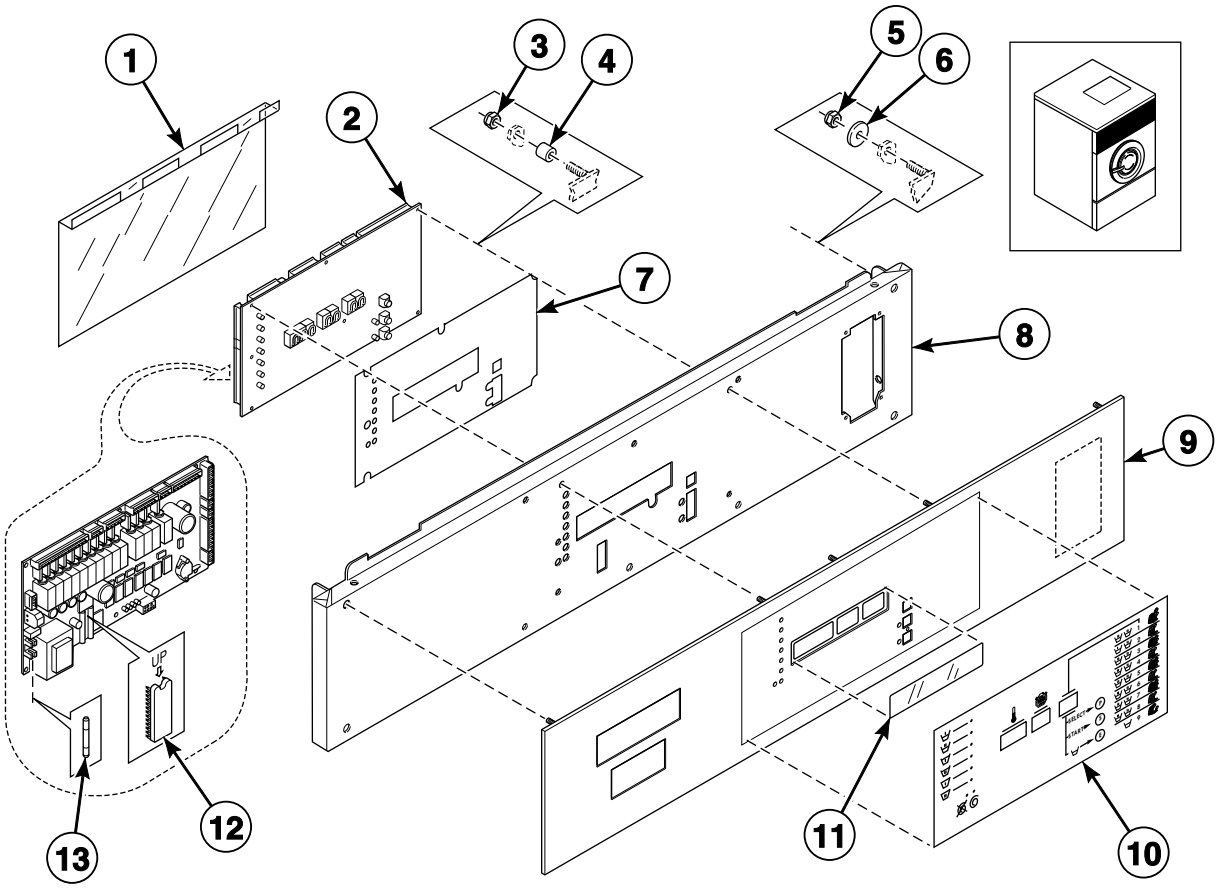

BE000424P_D0245

© Copyright, Alliance Laundry Systems LLC – DO NOT COPY or TRANSMIT

Control Panel - Micro-20

REF	PART NO.	DESCRIPTION	COMMENTS
1	229/00262/00	Circuit Board Cover	
2	209/00440/00	Printboard	Models through 8/31/01
	209/00440/70	Printboard	Models starting 9/1/01
3	204/00116/00	Nut	
4	211/00122/00	Standoff	
5	204/00009/00	Nut	
6	201/00008/00	Washer	
7	229/00255/00	Insulating Sticker	
8	111/00185/00	Upper Front Panel	
9	225/00307/AOL	Panel	
	225/00299/AOL	Panel	
10	225/00308/00	Sticker	Coin models
	225/00309/00	Sticker	OPL models; With ECO
11	225/00316/00	Plexi Frame	
12	209/00266/01	Eprom	
13	209/00439/00	Fuse	

© Copyright, Alliance Laundry Systems LLC – DO NOT COPY or TRANSMIT

Control Panel - Sigma

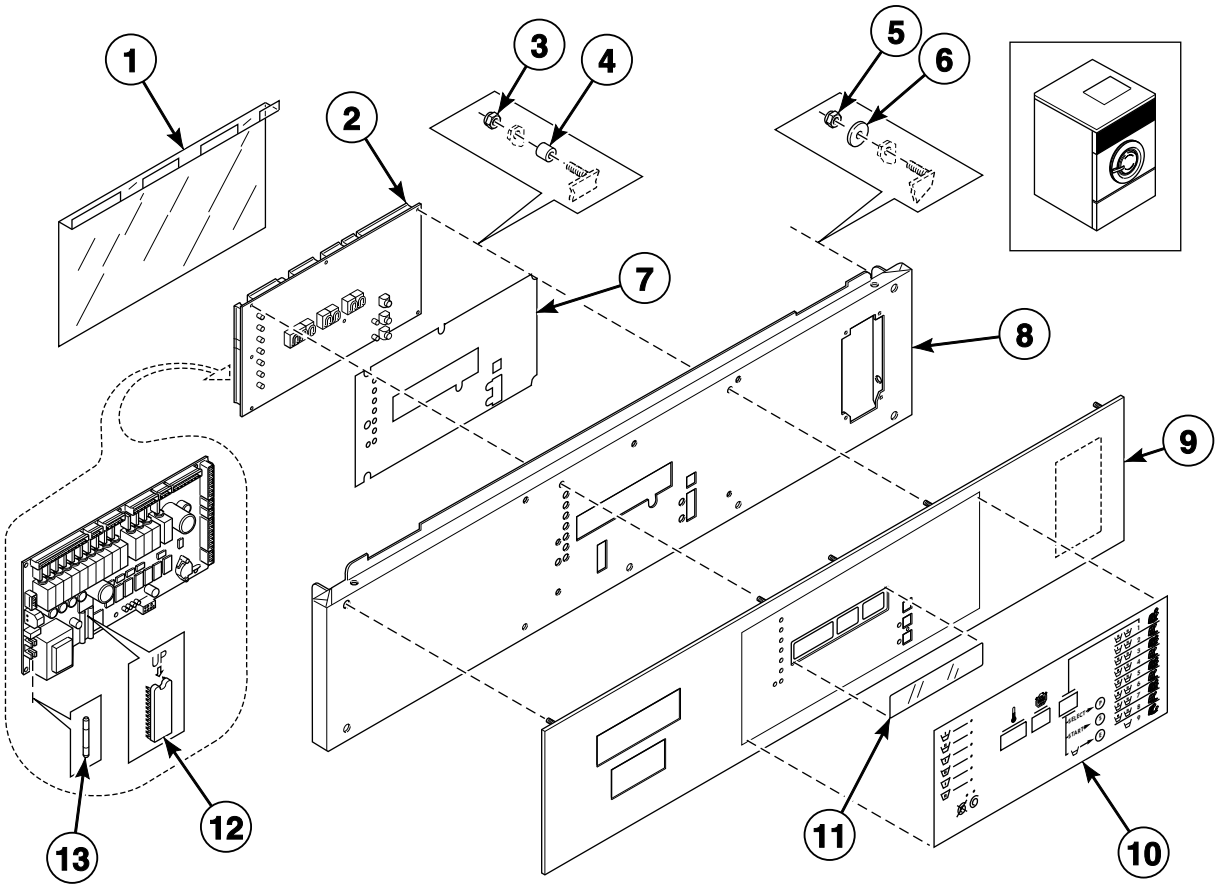

BE000424P_D0245

© Copyright, Alliance Laundry Systems LLC – DO NOT COPY or TRANSMIT

Control Panel - Sigma

REF	PART NO.	DESCRIPTION	COMMENTS
1	229/00262/00	Circuit Board Cover	
2	209/00547/00	Control Board	
3	204/00114/00	Nut	
4	211/00122/00	Standoff	
5	204/00009/00	Nut	
6	201/00008/00	Washer	
7	229/00255/00	Insulating Sticker	
8	111/00185/00	Upper Front Panel	
9	225/00307/AOL	Panel	
	225/00299/AOL	Panel	
10	225/00403/00	Decal	Coin models
	225/00404/00	Operating Sticker	OPL models; With ECO
	225/00405/00	Operating Sticker	OPL models
11	225/00316/00	Plexi Frame	
12	209/00266/01	Eprom	
13	209/00439/00	Fuse	

© Copyright, Alliance Laundry Systems LLC – DO NOT COPY or TRANSMIT

Control Panel - PS40F

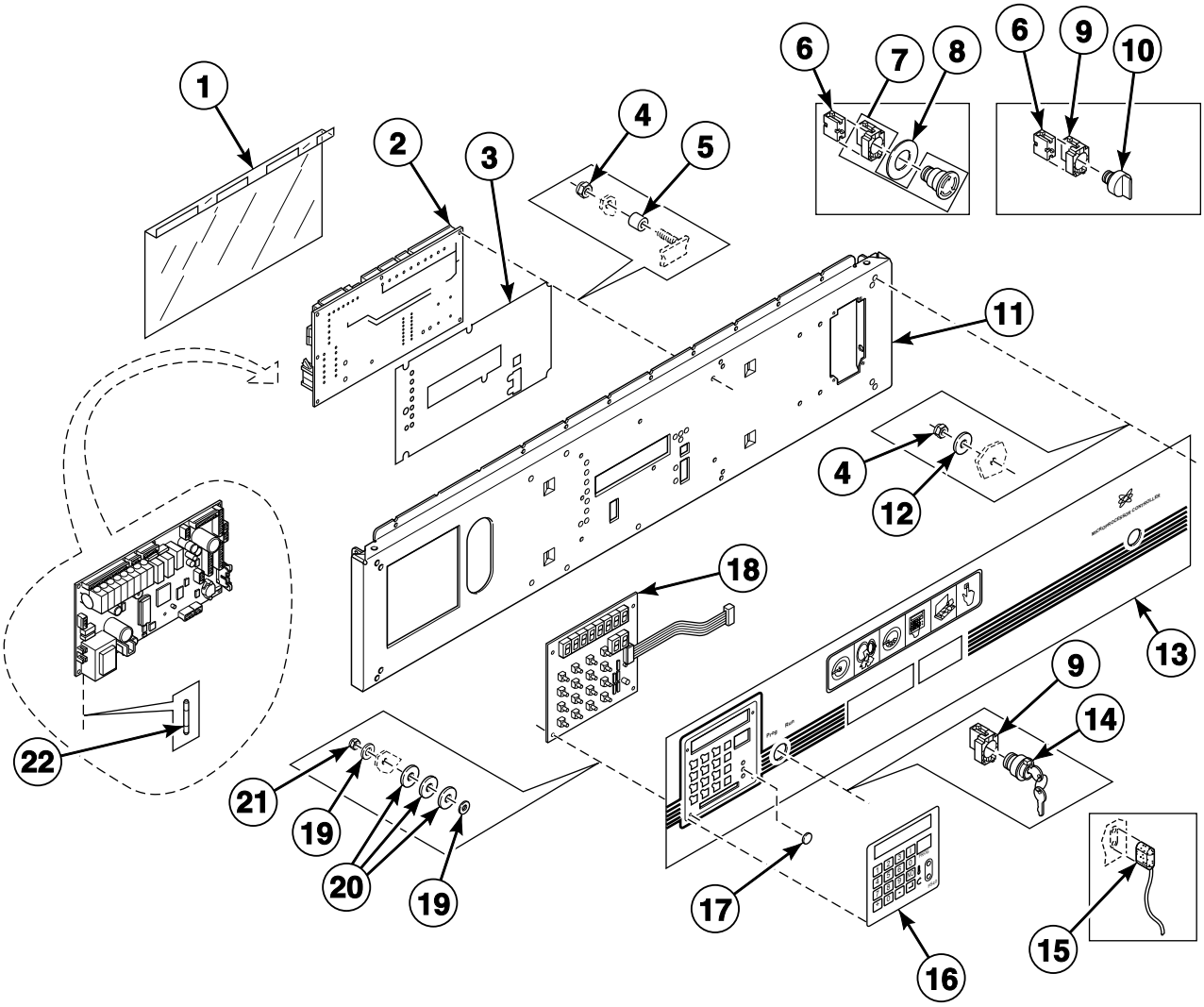

BE000556P_D0245

© Copyright, Alliance Laundry Systems LLC – DO NOT COPY or TRANSMIT

Control Panel - PS40F

REF	PART NO.	DESCRIPTION	COMMENTS
1	229/00262/00	Circuit Board Cover	
2	B12351701	Main Board	
3	229/00255/00	Insulating Sticker	
4	204/00116/00	Nut	
5	211/00122/00	Standoff	
6	209/00099/26	Contact Switch	
7	209/00248/20	Mushroom Pushbutton	
8	209/00520/00	Telem Sticker	
9	209/00099/25	Switch Base	
10	209/00099/29	Switch Knob	
11	111/05015/00	Door Front Panel	
12	201/00008/00	Washer	
13	225/00274/00	Front Panel	
14	209/00326/20	Programming Key Contact Switch	
15	210/00902/00	Infrared Cable	
16	225/00365/00	Overlay	
17	202/00120/00	Metal Disc	
18	209/00552/01	Keypad	
19	223/00123/00	Washer	
20	223/00051/10	Washer	
21	204/00116/00	Nut	
22	209/00372/01	Fuse	

© Copyright, Alliance Laundry Systems LLC – DO NOT COPY or TRANSMIT

Control Panel - PC30

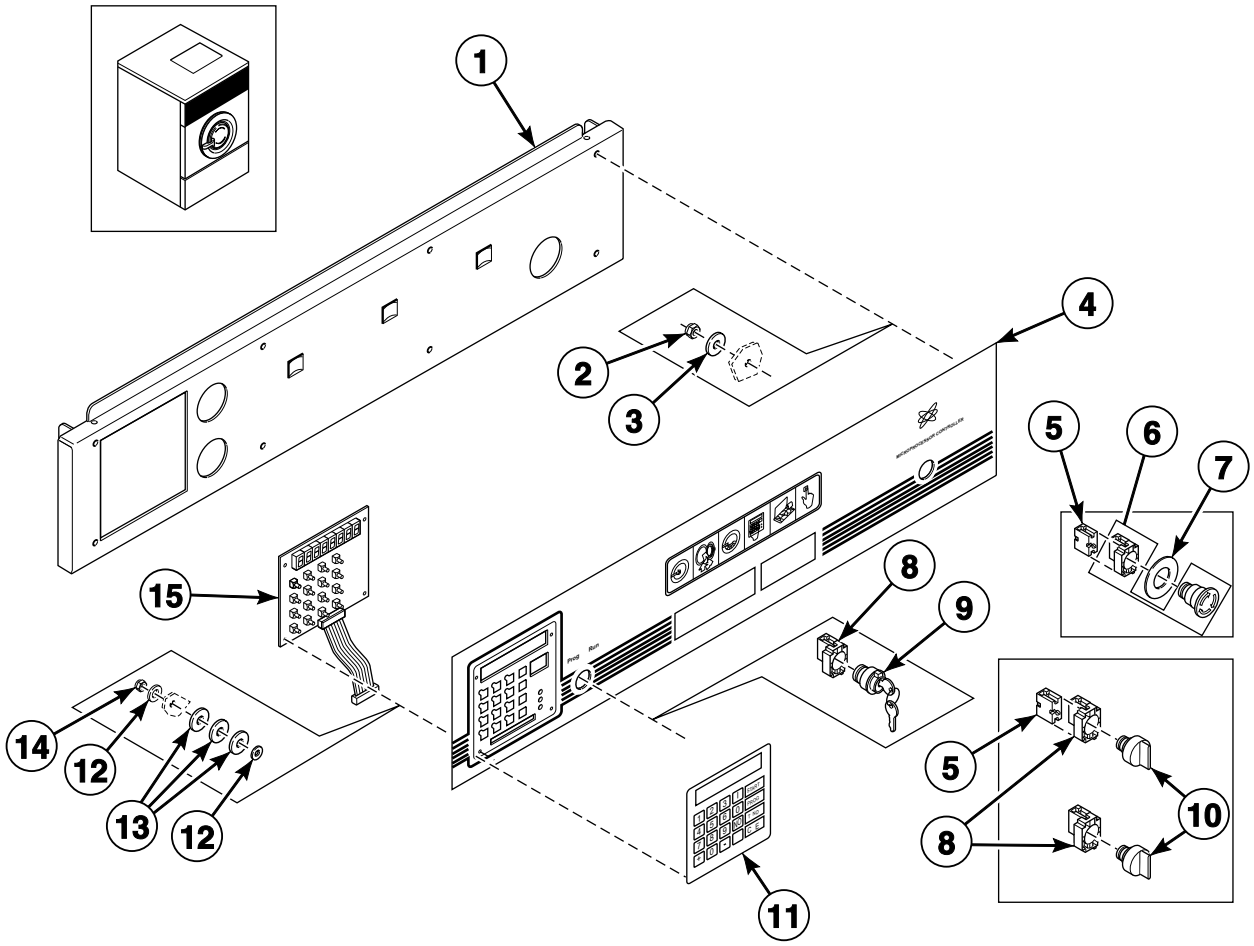

© Copyright, Alliance Laundry Systems LLC – DO NOT COPY or TRANSMIT

Control Panel - PC30

REF	PART NO.	DESCRIPTION	COMMENTS
1	111/00202/00	Front Panel	
2	204/00114/00	Nut	
3	201/00008/00	Washer	
4	225/00274/00	Front Panel	
5	209/00099/26	Contact Switch	
6	209/00248/20	Mushroom Pushbutton	
7	209/00520/00	Telem Sticker	
8	209/00099/25	Switch Base	
9	209/00326/20	Programming Key Contact Switch	
10	209/00099/29	Switch Knob	
11	229/00245/00	Label	
12	223/00123/00	Washer	
13	223/00051/10	Washer	
14	204/00116/00	Nut	
15	209/00323/01	Keyboard	

© Copyright, Alliance Laundry Systems LLC – DO NOT COPY or TRANSMIT

Control Panel - 10-Button Mechanical Timer (Drawing 1 of 2)

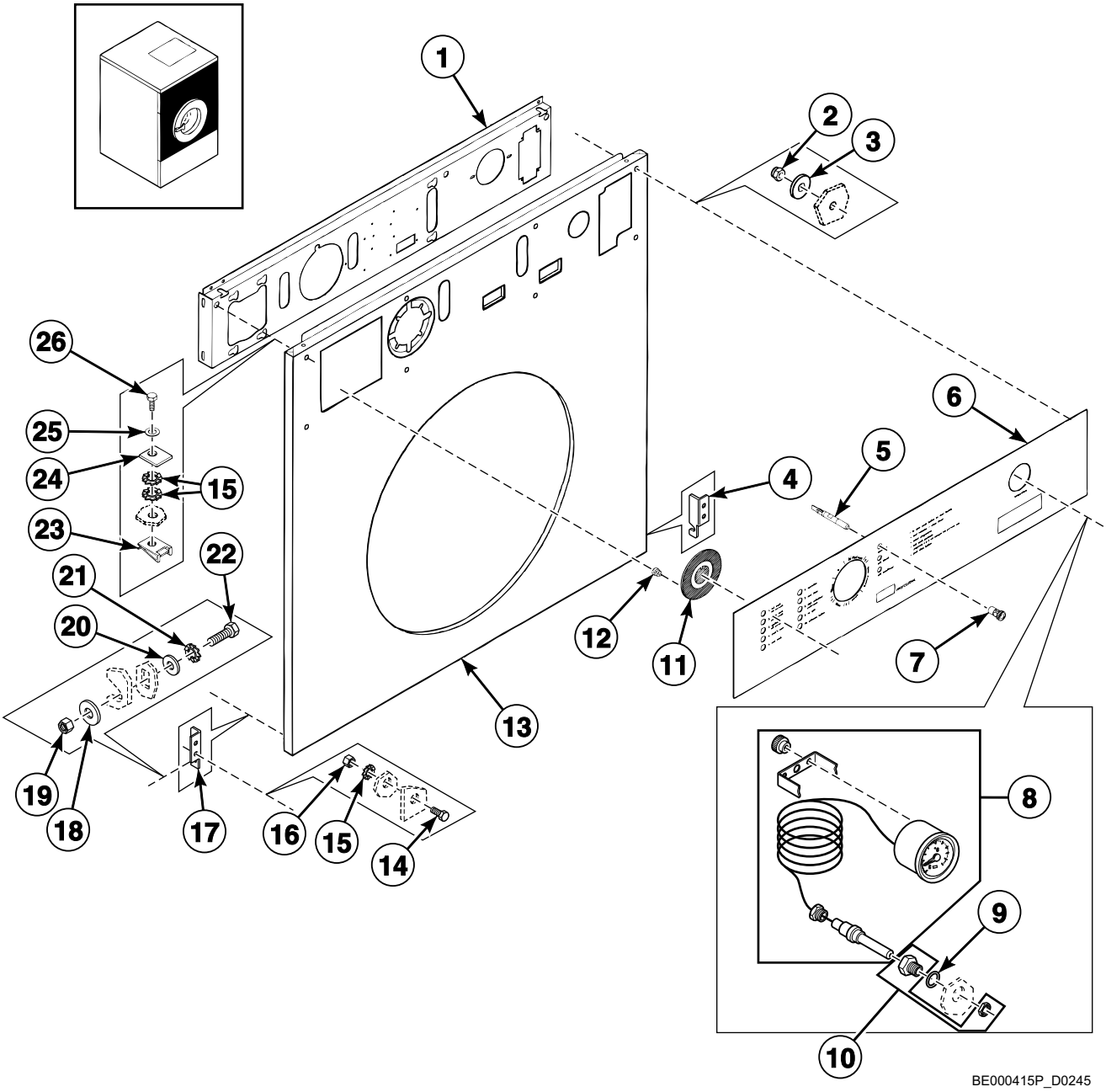

© Copyright, Alliance Laundry Systems LLC – DO NOT COPY or TRANSMIT

Control Panel - 10-Button Mechanical Timer (Drawing 1 of 2)

REF	PART NO.	DESCRIPTION	COMMENTS
1	133/00003/00	Front Bridge	
2	204/00114/00	Nut	
3	201/00008/00	Washer	
4	111/00002/00	Hook	
5	209/00151/00	Lamp	
6	225/00112/ABL	Front Panel	
7	209/00152/00	Lens Cover	Red
	209/00154/00	Lens Cover	Orange
8	211/00115/00	Thermostat	
9	223/00065/01	Washer	
10	223/00065/00	Thermostat Seal	
11	225/00078/00	Program Indicator	
12	225/10023/00	Fastener	
13	113/00111/00	Front Panel	
14	206/00016/00	Bolt	
15	203/00005/00	Washer	
16	204/00107/00	Nut	
17	111/00001/00	Hook	
18	201/00006/00	Washer	
19	204/00106/00	Nut	
20	201/00007/00	Washer	
21	203/00003/00	Washer	
22	205/00104/00	Bolt	
23	204/00013/00	Nut	
24	117/00042/00	Retaining Ring	
25	202/00103/00	Washer	
26	205/00106/00	Bolt	

© Copyright, Alliance Laundry Systems LLC – DO NOT COPY or TRANSMIT

Control Panel - 10-Button Mechanical Timer (Drawing 2 of 2)

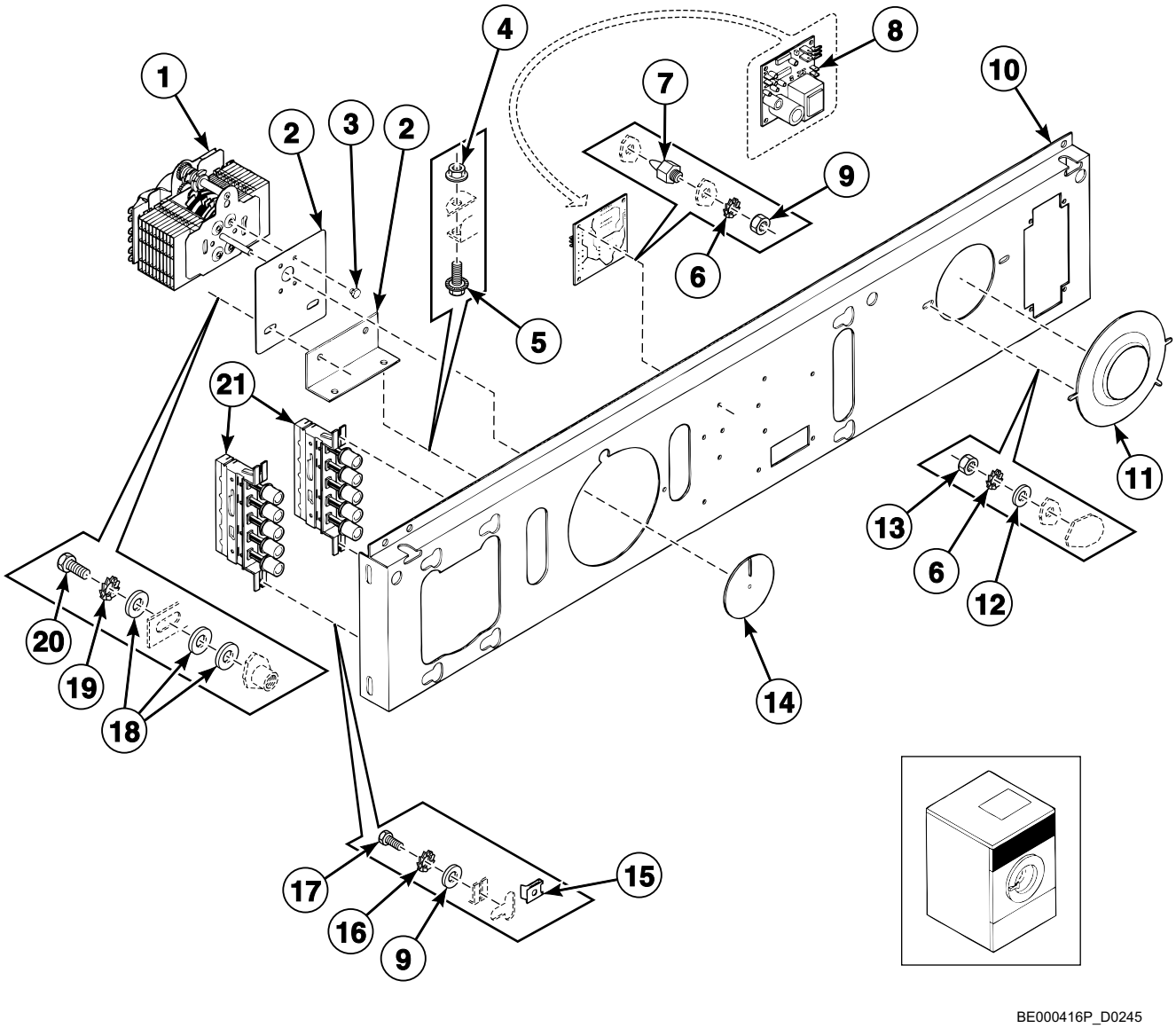

© Copyright, Alliance Laundry Systems LLC – DO NOT COPY or TRANSMIT

Control Panel - 10-Button Mechanical Timer (Drawing 2 of 2)

REF	PART NO.	DESCRIPTION	COMMENTS
1	209/00107/00	Timer	
2	133/00004/00	Timer Mounting Plate	
3	206/00021/00	Screw	
4	206/00101/00	Nut	
5	206/00099/00	Bolt	
6	203/00006/00	Washer	
7	211/00120/00	Standoff	
8	209/00275/04	Door Lock Board	
9	201/00007/00	Washer	
10	133/00003/00	Front Bridge	
11	140/00012/00	Mounting Plate	
12	201/00008/00	Washer	
13	204/00007/00	Nut	
14	225/00001/00	Program Indicator	
15	204/00013/00	Nut	
16	203/00005/00	Washer	
17	206/00054/00	Bolt	
18	201/00006/00	Washer	
19	203/00004/00	Washer	
20	206/00013/00	Bolt	
21	209/00175/01	Pushbutton	

© Copyright, Alliance Laundry Systems LLC – DO NOT COPY or TRANSMIT

Control Panel - 5-Button Mechanical Timer Coin (Drawing 1 of 2)

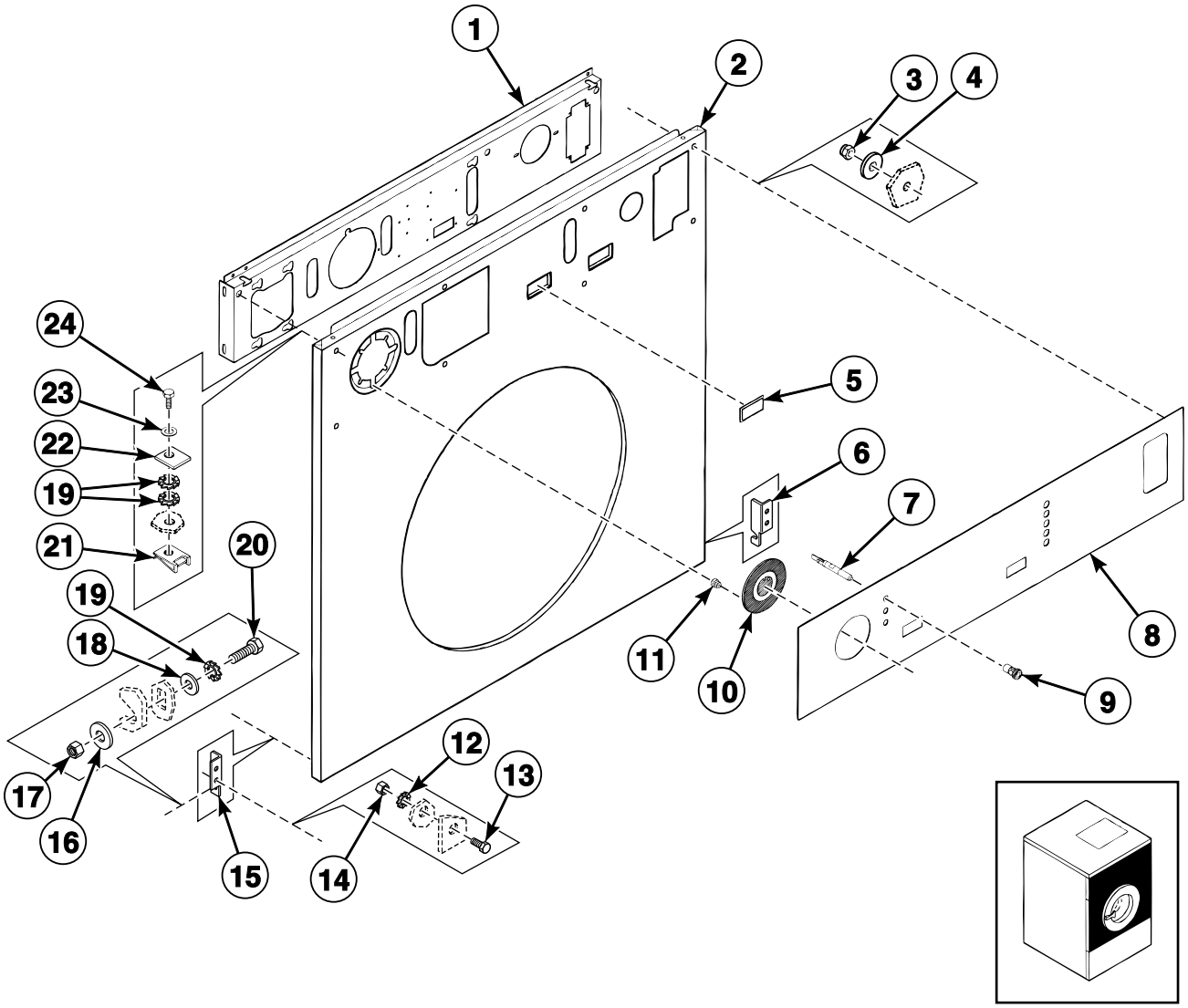

BE000422P_D0245

© Copyright, Alliance Laundry Systems LLC – DO NOT COPY or TRANSMIT

Control Panel - 5-Button Mechanical Timer Coin (Drawing 1 of 2)

REF	PART NO.	DESCRIPTION	COMMENTS
1	133/00003/00	Front Bridge	
2	133/00112/00	Front Panel	
3	204/00114/00	Nut	
4	201/00008/00	Washer	
5	223/10066/00	Display	
6	111/00002/00	Hook	
7	209/00151/00	Lamp	
8	325/00272/ABL	Panel	
9	209/00152/00	Lens Cover	Red
	209/00154/00	Lens Cover	Orange
10	225/00078/00	Program Indicator	
11	225/10023/00	Fastener	
12	203/00005/00	Washer	
13	206/00016/00	Bolt	
14	204/00107/00	Nut	
15	111/00001/00	Hook	
16	201/00006/00	Washer	
17	204/00106/00	Nut	
18	201/00007/00	Washer	
19	203/00003/00	Washer	
20	205/00104/00	Bolt	
21	204/00013/00	Nut	
22	117/00042/00	Retaining Ring	
23	202/00103/00	Washer	
24	208/00106/00	Bolt	

© Copyright, Alliance Laundry Systems LLC – DO NOT COPY or TRANSMIT

Control Panel - 5-Button Mechanical Timer Coin (Drawing 2 of 2)

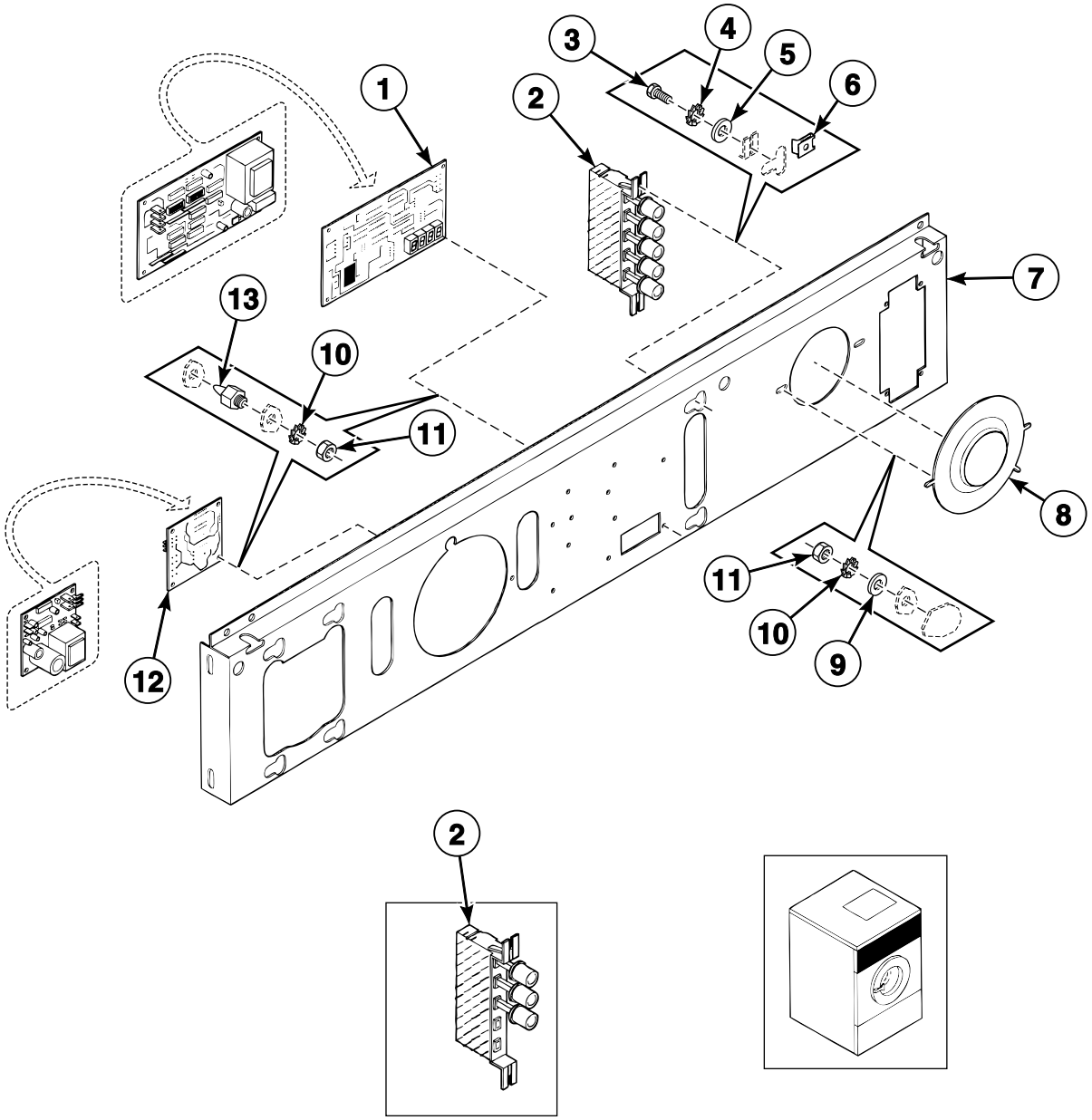

© Copyright, Alliance Laundry Systems LLC – DO NOT COPY or TRANSMIT

Control Panel - 5-Button Mechanical Timer Coin (Drawing 2 of 2)

REF	PART NO.	DESCRIPTION	COMMENTS
1	209/00217/00	Coin Display	
2	209/00175/01	Pushbutton	
3	206/00054/00	Bolt	
4	203/00005/00	Washer	
5	201/00007/00	Washer	
6	204/00013/00	Nut	
7	133/00003/00	Front Bridge	
8	140/00012/00	Mounting Plate	
9	201/00008/00	Washer	
10	203/00006/00	Washer	
11	204/00007/00	Nut	
12	209/00275/04	Door Lock Board	
13	211/00120/00	Standoff	

© Copyright, Alliance Laundry Systems LLC – DO NOT COPY or TRANSMIT

Electrical Component Mounting Plate - Mechanical Timer

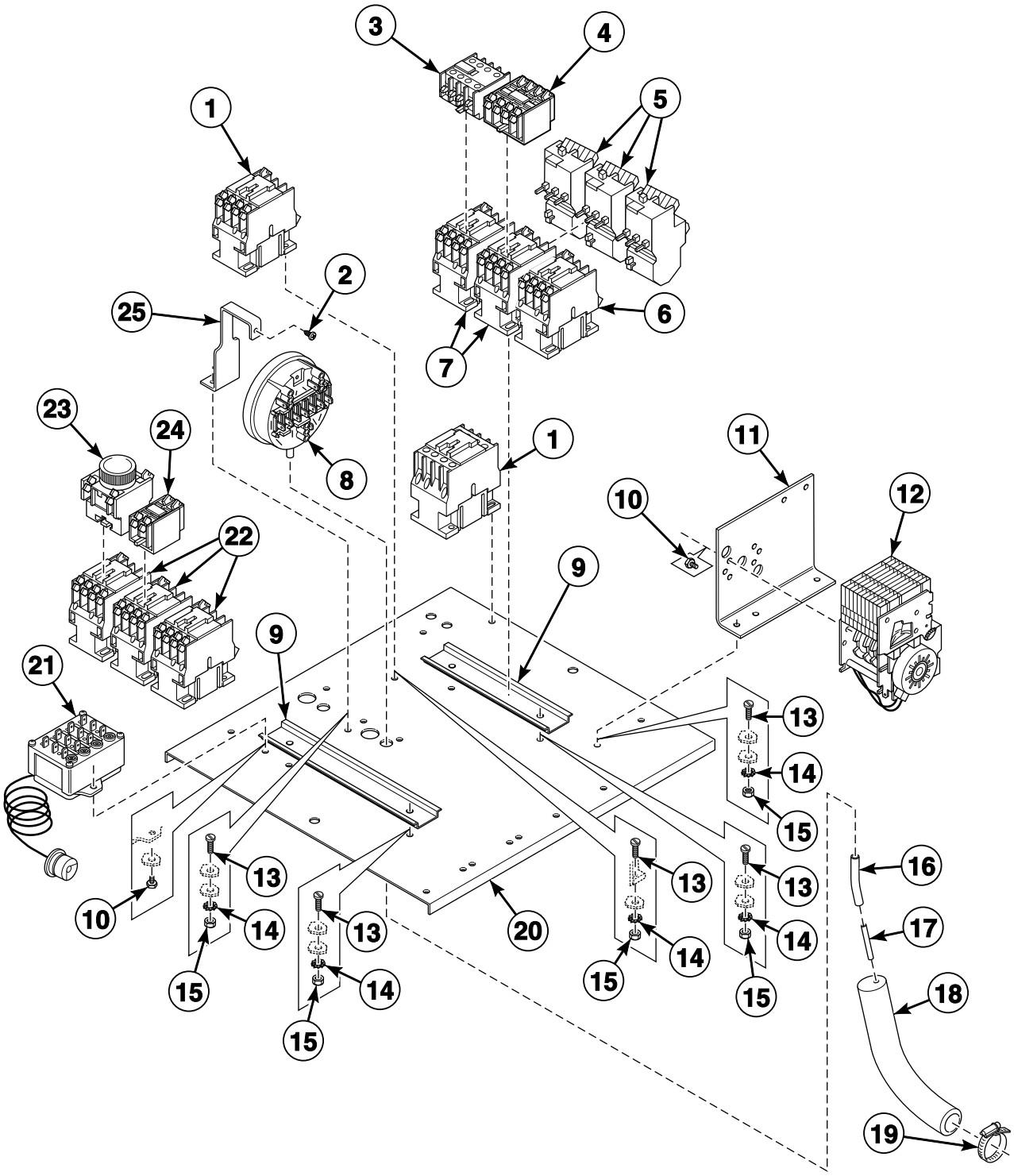

BE000417P_D0245

© Copyright, Alliance Laundry Systems LLC – DO NOT COPY or TRANSMIT

Electrical Component Mounting Plate - Mechanical Timer

REF	PART NO.	DESCRIPTION	COMMENTS
1	209/00148/02	Contactor	
2	208/00007/00	Screw	
3	209/00139/02	Contactor	
4	209/00140/02	Contactor	
5	209/00263/00	Protector	LR2-D13089; 2.5-4A
	209/00264/00	Protector	LR2-D13109; 4-6A
	209/00265/00	Protector	LR2-D13149; 7-10A
	209/00285/00	Protector	LR2-D13129; 5.5-8A
	209/00299/00	Protector	LR2-D13169; 9-13A
6	209/00136/02	Contactor	
7	209/00041/05	Contactor	
8	209/00007/30	Pressure Switch	
9	111/00074/00	Rail	
10	206/00021/00	Screw	
11	111/00035/00	Mounting Plate	
12	209/00012/00	Reversing Timer	
13	207/00004/00	Screw	
14	203/00006/00	Washer	
15	204/00007/00	Nut	
16	223/00082/00	Pressure Hose	
17	223/00016/00	Hose Barb	
18	223/00015/00	Level Switch Elbow	
19	223/00011/00	Hose Clamp	
20	111/00072/00	Assembly Plate	
21	209/00243/00	Thermostat	
22	209/00041/03	Contactor	
23	209/00103/02	Switch	
24	209/00011/02	Auxiliary Contactor	
25	111/00424/00	Pressure Switch Bracket	

© Copyright, Alliance Laundry Systems LLC – DO NOT COPY or TRANSMIT

Electrical Component Mounting Plate - PC30

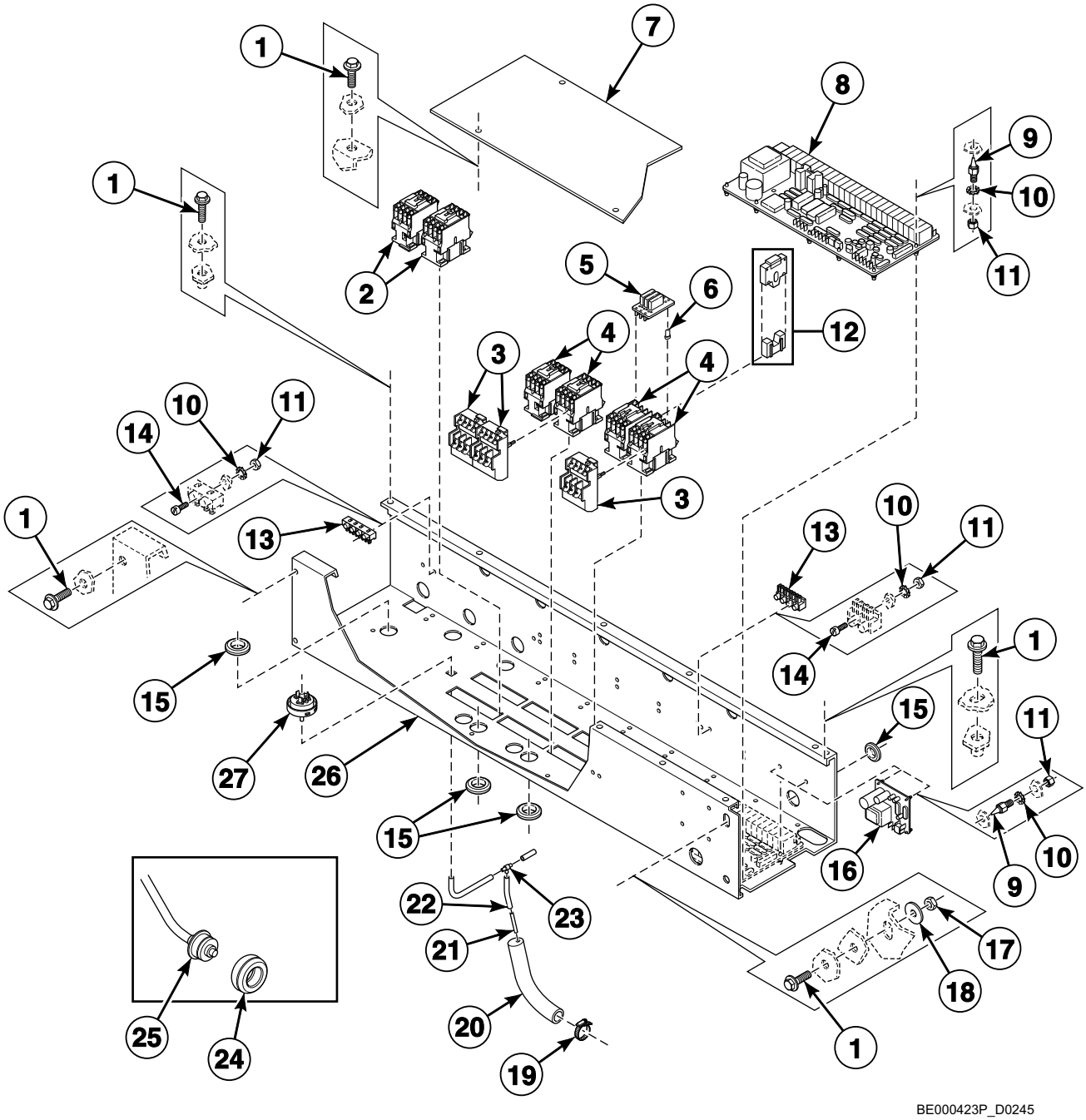

© Copyright, Alliance Laundry Systems LLC – DO NOT COPY or TRANSMIT

Electrical Component Mounting Plate - PC30

REF	PART NO.	DESCRIPTION	COMMENTS
1	206/00099/00	Bolt	
2	209/00041/04	Contactor	LC1D0901M7; Heating
	209/00148/02	Contactor	LC1D1810M7
3	209/00299/00	Protector	LR2-D13169; 9-13A
	209/00285/00	Protector	LR2-D13129; 5.5-8A
	209/00264/00	Protector	LR2-D13109; 4-6A
	209/00263/00	Protector	LR2-D13089; 2.5-4A
4	209/00041/05	Contactor	
5	209/00452/01	Printboard	
6	209/00452/02	Lug Holder	
7	140/00020/01	Assembly Plate	1055 mm
	140/00020/11	Assembly Plate	1090 mm
8	209/00323/02	Printboard	
9	211/00120/00	Standoff	
10	203/00006/00	Washer	
11	204/00007/00	Nut	
12	209/00279/00	Lock	
13	209/00005/00	Terminal Block	
14	207/00003/00	Screw	
15	223/00198/00	Grommet	
16	N/A	Door Lock Board	
17	204/00005/00	Nut	
18	201/00006/00	Washer	
19	223/00011/00	Hose Clamp	
20	223/00015/00	Level Switch Elbow	
21	223/00016/00	Hose Barb	
22	223/00082/00	Pressure Hose	
23	223/00173/00	Pressure Switch Hose Tee	
24	225/10004/00	Thermostat Seal	
25	209/00309/02	Thermostat Assembly	
26	140/00020/00	Assembly Plate	1055 mm
	140/00020/10	Assembly Plate	1090 mm
27	209/00007/50	Pressure Switch	

N/A = Part no longer available

© Copyright, Alliance Laundry Systems LLC – DO NOT COPY or TRANSMIT

Electrical Component Mounting Plate - Micro 20 and Sigma

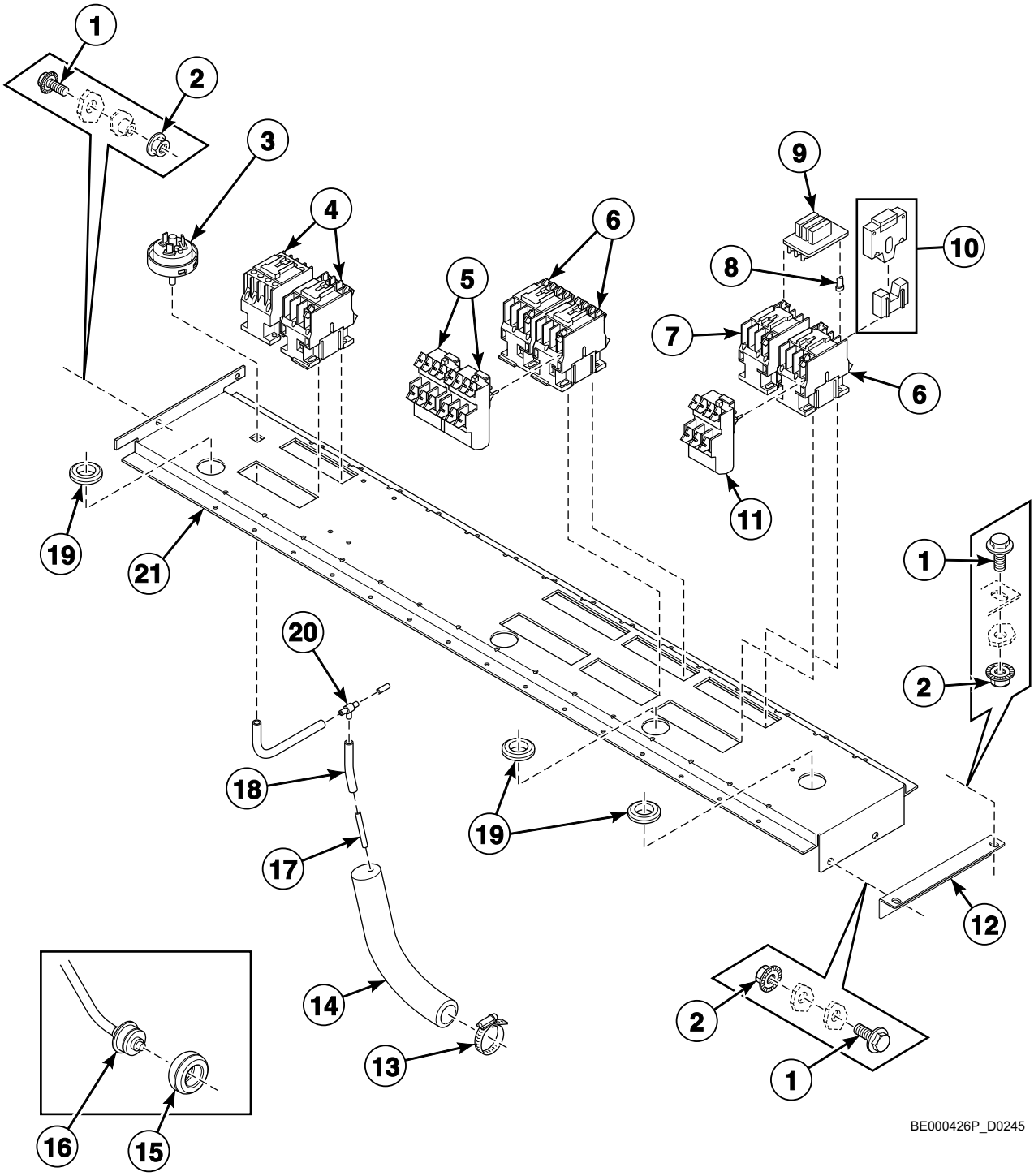

© Copyright, Alliance Laundry Systems LLC – DO NOT COPY or TRANSMIT

Electrical Component Mounting Plate - Micro 20 and Sigma

REF	PART NO.	DESCRIPTION	COMMENTS
1	206/00099/00	Bolt	
2	206/00101/00	Nut	
3	209/00667/50	Water Level Switch	
4	209/00148/02	Contactor	
5	209/00285/00	Protector	LR2-D13129; 5.5-8A
	209/00299/00	Protector	LR2-D13169; 9-13A
6	209/00041/05	Contactor	
7	209/00041/03	Contactor	
8	209/00452/02	Lug Holder	
9	209/00452/01	Printboard	
10	209/00279/00	Lock	
11	209/00263/00	Protector	LR2-D13089; 2.5-4A
	209/00264/00	Protector	LR2-D13109; 4-6A
12	111/00198/01	Assembly Plate Support	
13	223/00011/00	Hose Clamp	
14	223/00015/00	Level Switch Elbow	
15	225/10004/00	Thermostat Seal	
16	209/00309/02	Thermostat Assembly	
17	223/00016/00	Hose Barb	
18	223/00082/00	Pressure Hose	
19	223/00198/00	Grommet	
20	223/00173/00	Pressure Switch Hose Tee	
21	111/00198/00	Assembly Plate	

© Copyright, Alliance Laundry Systems LLC – DO NOT COPY or TRANSMIT

Coin Meter and Coin Vault

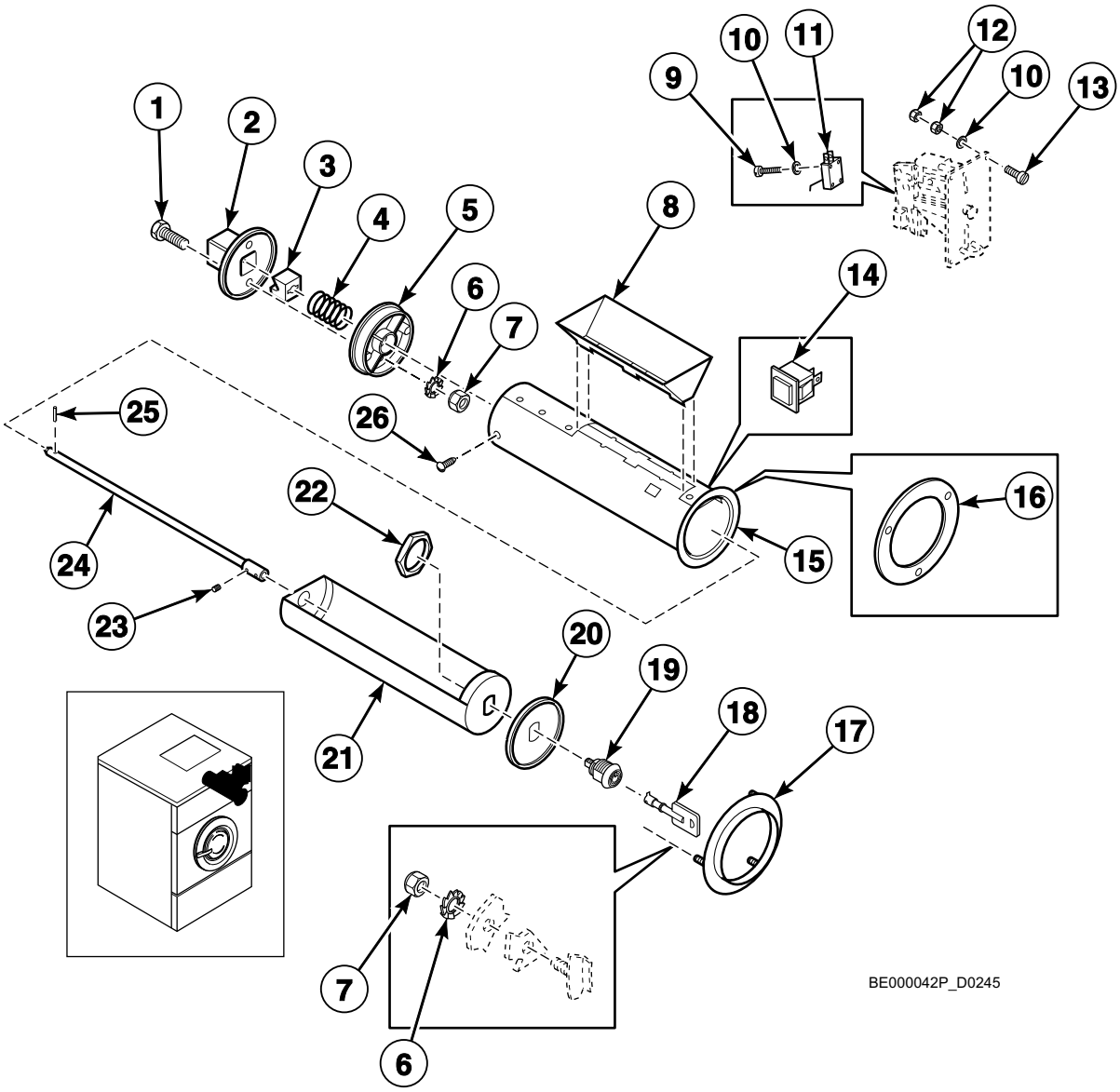

© Copyright, Alliance Laundry Systems LLC – DO NOT COPY or TRANSMIT

Coin Meter and Coin Vault

REF	PART NO.	DESCRIPTION	COMMENTS
1	206/00033/00	Bolt	
2	211/00070/01	Outer Cabinet Lock	
3	211/00070/02	Washer	
4	211/00070/04	Spring	
5	211/00070/03	Inner Coin Box	
6	203/00004/00	Washer	
7	204/00005/00	Nut	
8	211/00071/00	Coin Box	
9	207/00009/00	Screw	
10	203/00007/00	Washer	
11	209/00060/12	Coin Drop Microswitch	
12	204/00008/00	Nut	
13	207/00108/00	Screw	
14	209/00396/00	Pushbutton	
15	211/00100/00	Outer Coin Box	
16	111/00100/00	Coin Box Ring Assembly	
17	111/00066/00	Coin Box Ring	
18	211/00065/02	Coin Box Key	
19	211/00065/00	Coin Box Lock	
20	111/00068/00	Front Plate	
21	211/00101/00	Coin Box	
22	211/00065/01	Nut	
23	206/00038/00	Screw	
24	111/00069/00	Spindle	
25	208/00013/00	Roll Pin	
26	208/00007/00	Screw	

© Copyright, Alliance Laundry Systems LLC – DO NOT COPY or TRANSMIT

Coin Meter (Drawing 1 of 2)

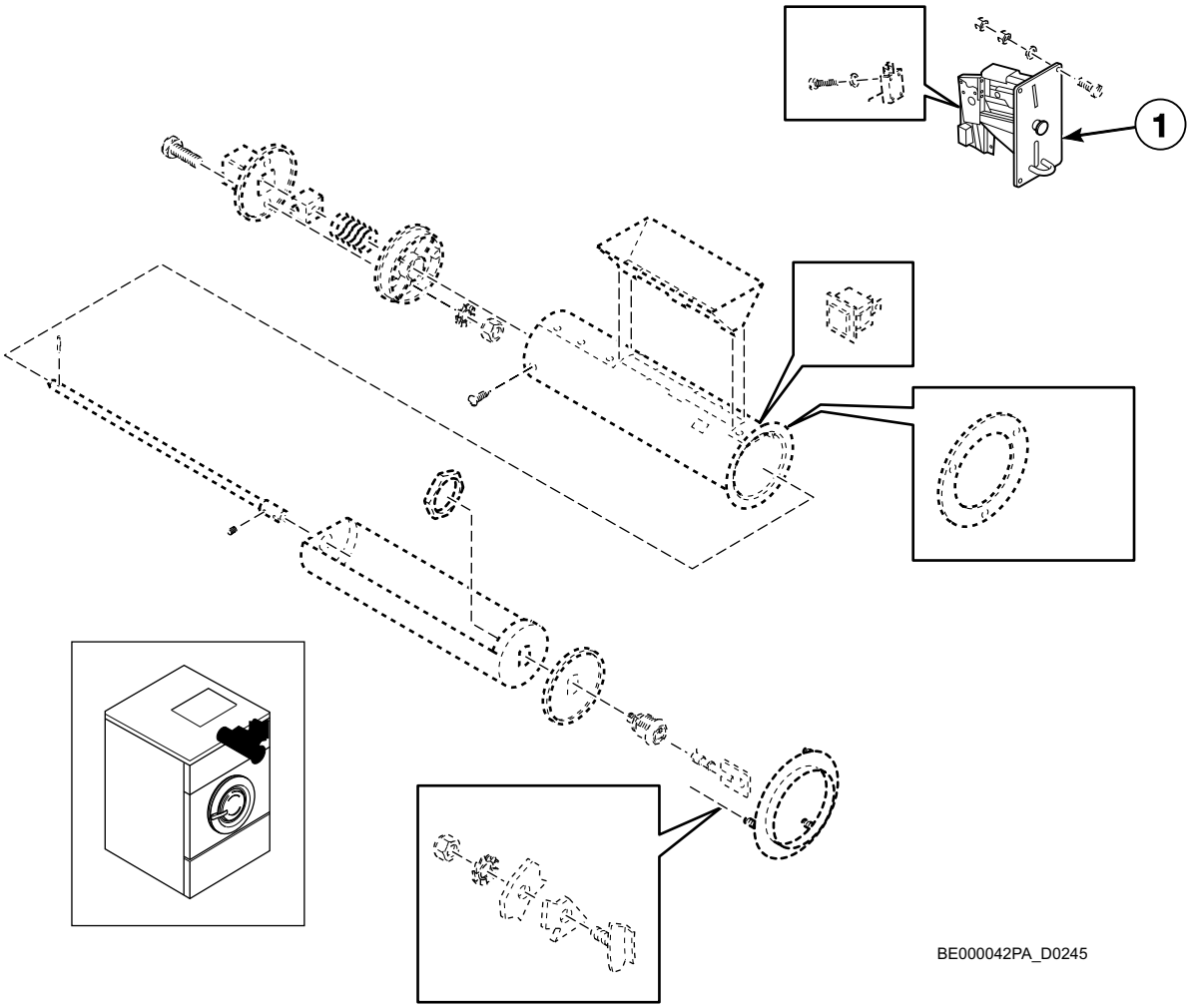

© Copyright, Alliance Laundry Systems LLC – DO NOT COPY or TRANSMIT

Coin Meter (Drawing 1 of 2)

REF	PART NO.	DESCRIPTION	COMMENTS
1	209/00389/00	Coin Meter	.10 euro
	209/00388/00	Coin Meter	.20 euro
	209/00387/00	Coin Meter	.50 euro
	209/00390/00	Coin Meter	1 euro
	209/00391/00	Coin Meter	1 euro; LVN
	209/00119/00	Coin Meter	.50 and .20 euro
	209/00120/00	Coin Meter	1 and .20 euro
	209/00166/00	Coin Meter	1 and .50 euro
	209/00576/00	Coin Meter	2 and .50 euro
	209/00111/00	Coin Meter	U.S.; $.25
	209/00111/10	Coin Meter	U.S.; $.25; Laundercenter
	209/00215/00	Coin Meter	.25 Hfl and 1 Hfl
	209/00414/00	Coin Meter	Canada; .25 and 1 dollar
	209/00214/00	Coin Meter	.25 Hfl
	209/00378/00	Coin Meter	Australia; 1 and 2 dollar
	209/00229/00	Coin Meter	Australia; 1 and .20 dollar
	209/00403/00	Coin Meter	1 fim and 5 fim
	209/00065/00	Coin Meter	Hong Kong; 1 dollar
	209/00418/00	Coin Meter	Malaysia; 1 dollar
	209/00364/00	Coin Meter	1 pound and 20 pence
	209/00437/00	Coin Meter	1 rand and 2 rand
	209/00442/00	Coin Meter	1 shekel and 5 shekel
	209/00375/00	Coin Meter	Singapore; 1 dollar
	209/00383/00	Coin Meter	New Zealand; 2 and 1 dollar
	209/00500/00	Coin Meter	5 Mdh and 10 Mdh
	209/00404/00	Coin Meter	5 NoCr and 10 NoCr
	209/00215/01	Coin Meter	1 Hfl
	209/00402/08	Coin Meter	10 dek and 2 dek
	209/00460/00	Coin Meter	2 dek
	209/00064/00	Coin Meter	Australia; .20 dollar
	209/10215/00	Coin Meter	5 Hfl and 1 Hfl
	209/00415/00	Coin Meter	Hong Kong; 5 dollar

© Copyright, Alliance Laundry Systems LLC – DO NOT COPY or TRANSMIT

Coin Meter (Drawing 2 of 2)

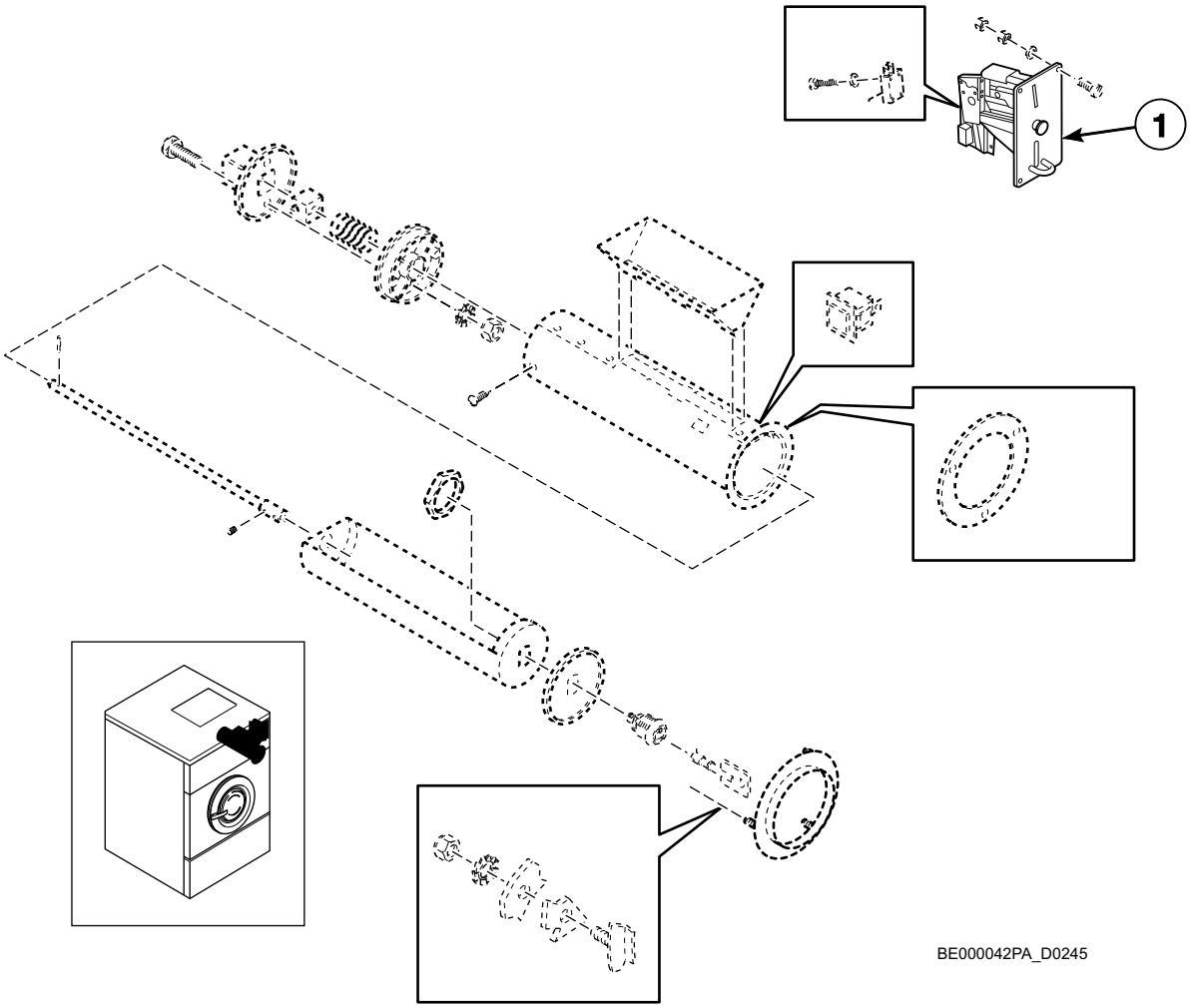

© Copyright, Alliance Laundry Systems LLC – DO NOT COPY or TRANSMIT

Coin Meter (Drawing 2 of 2)

REF	PART NO.	DESCRIPTION	COMMENTS
1	209/00501/00	Coin Meter	50 kronur and 100 kronur
	209/00402/01	Coin Meter	.800 token
	209/00402/03	Coin Meter	Token
	209/00402/07	Coin Meter	Token; Wash Club
	209/00428/00	Coin Meter	Token; Custruzione
	209/00502/00	Coin Meter	Token; Muller
	209/00402/04	Coin Meter	Prinz token; 28 x 2.7 mm
	209/00402/02	Coin Meter	Prinz token; 22.85 x 2.1 mm
	209/00407/00	Coin Meter	Prinz token; 26 x 2.05 mm
	209/00469/00	Coin Meter	NRI
	209/00216/00	Coin Meter	100 yen
	209/00278/00	Coin Meter	100 yen and 500 yen
	209/00373/00	Coin Meter	500 won
	209/00522/00	Coin Meter	Trenner
	209/00060/00	Coin Drop	Token; 5K
	209/00061/00	Coin Meter	Token; 7K
	209/00068/00	Coin Meter	Token; 10K
	209/00069/00	Coin Meter	Token; 12K
	209/00070/00	Coin Meter	Token; 15K
	209/00122/00	Coin Meter	Token; Boissevain
	209/00411/00	Coin Meter	Token; Carsen
	209/00156/00	Coin Meter	Token; Gettone per
	209/00121/00	Coin Meter	Profiled token
	209/00062/00	Coin Meter	Token; Vasketeria
	209/00161/00	Coin Meter	1 dek
	209/00158/00	Coin Meter	1 rail
	209/00160/00	Coin Meter	5 dek
	209/00269/00	Coin Meter	100 won and 500 won
	209/00286/00	Coin Meter	Token; Blanc Club Lavage
	209/00296/00	Coin Meter	Token; Clean Wash
	209/00123/00	Coin Meter	Token; Jessernigg
	209/00162/00	Coin Meter	Token; Vasketeria and 5DK
	209/00066/00	Coin Meter	Token; Vasketeria and 2 x 1
	209/00072/00	Coin Meter	Token; Wascator
	209/00553/00	Coin Meter	U.S.; $1.00 and $.25
	209/00548/00	Coin Meter	100 pesetas and 25 pesetas

© Copyright, Alliance Laundry Systems LLC – DO NOT COPY or TRANSMIT

Right Side, Front, Lower Rear and Top Panels

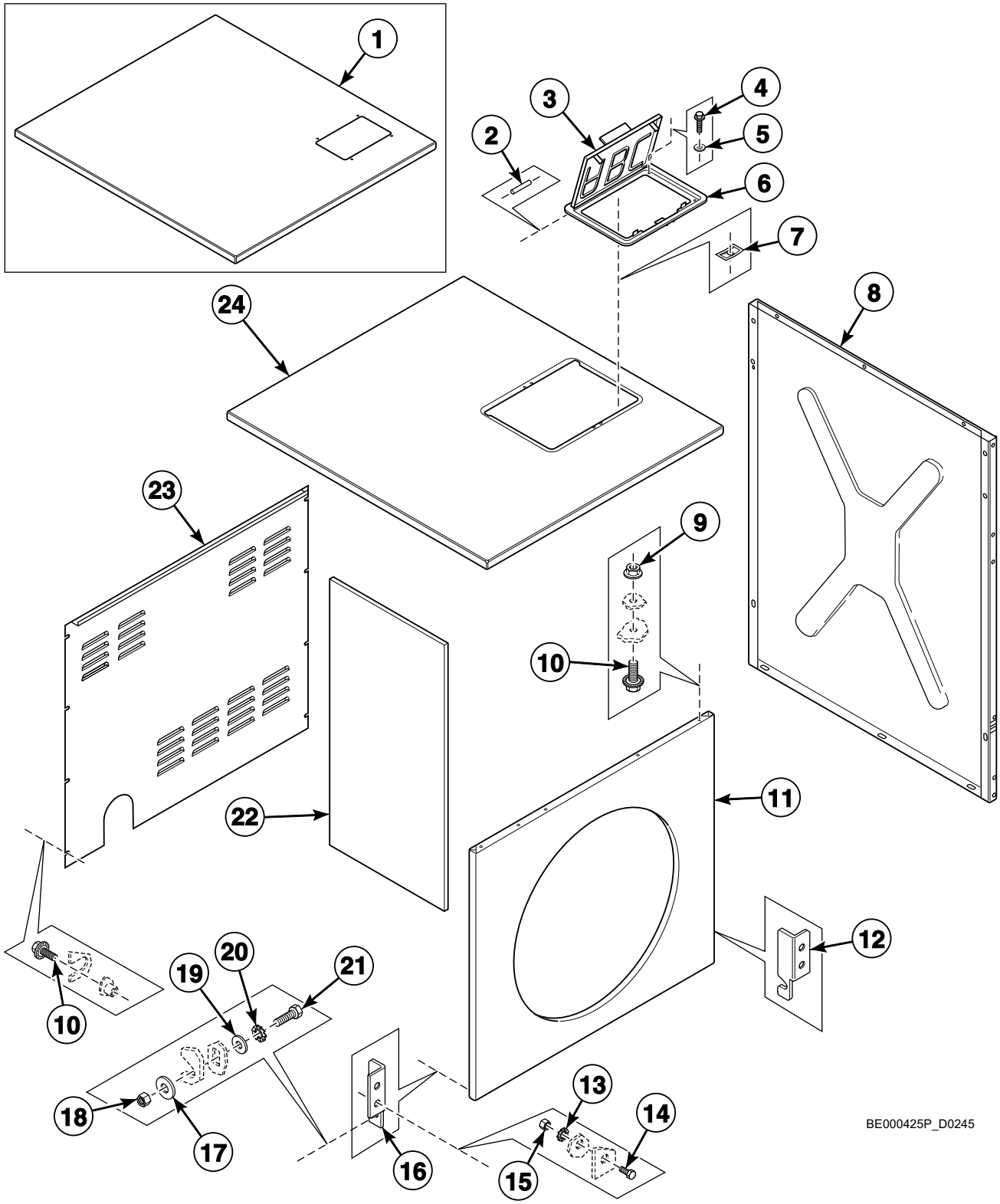

© Copyright, Alliance Laundry Systems LLC – DO NOT COPY or TRANSMIT

Right Side, Front, Lower Rear and Top Panels

REF	PART NO.	DESCRIPTION	COMMENTS
1	133/00102/00	Top Panel	
2	223/00103/04	Soap Dispenser Cover Hinge Rod	2 required
3	223/00103/01	Soap Dispenser Cover	
4	205/00108/00	Bolt	
5	202/00101/00	Washer	
6	223/00103/03	Soap Dispenser Frame	
7	208/00104/00	Nut	
8	133/00126/00	Side Panel	
9	206/00101/00	Nut	
10	206/00099/00	Bolt	
11	111/00164/00	Lower Front Panel	OPL models
	111/00229/00	Lower Front Panel	Coin models
12	111/00002/00	Hook	
13	203/00005/00	Washer	
14	206/00016/00	Bolt	
15	204/00107/00	Nut	
16	111/00001/00	Hook	
17	201/00006/00	Washer	
18	204/00106/00	Nut	
19	201/00007/00	Washer	
20	203/00003/00	Washer	
21	205/00104/00	Bolt	
22	246/00079/00	Side Panel Gasket	
23	133/00115/00	Back Panel	
24	140/00024/00	Top Panel	

© Copyright, Alliance Laundry Systems LLC – DO NOT COPY or TRANSMIT

Left Side, Lower Front and Upper Back Panels

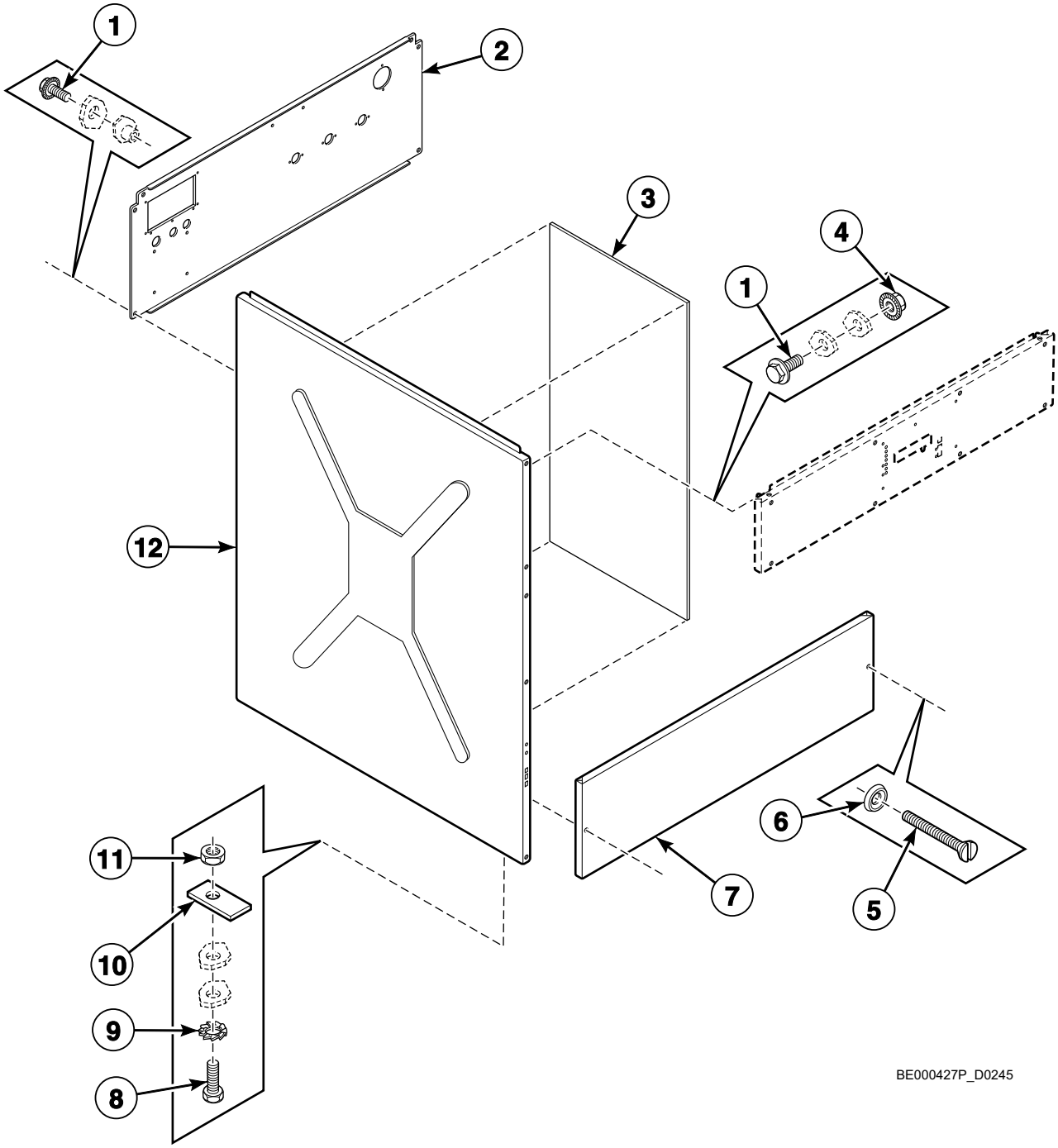

© Copyright, Alliance Laundry Systems LLC – DO NOT COPY or TRANSMIT

Left Side, Lower Front and Upper Back Panels

REF	PART NO.	DESCRIPTION	COMMENTS
1	206/00099/00	Bolt	
2	133/00001/00	Backbridge	Models through 12/31/94
	111/01166/10	Backbridge	Models starting 1/1/95 with inverter drive
	111/01160/00	Backbridge	Models starting 1/1/95 without inverter drive
3	246/00079/00	Side Panel Gasket	
4	206/00101/00	Nut	
5	207/00130/00	Screw	
6	208/00009/00	Washer	
7	133/00131/00	Lower Front Panel	
8	205/00104/00	Bolt	
9	203/00004/00	Washer	
10	101/00007/00	Outlet Pipe Plate Assembly	
11	204/00005/00	Nut	
12	133/00126/00	Side Panel	

© Copyright, Alliance Laundry Systems LLC – DO NOT COPY or TRANSMIT

Upper Back Panel - Models Through 12/31/94

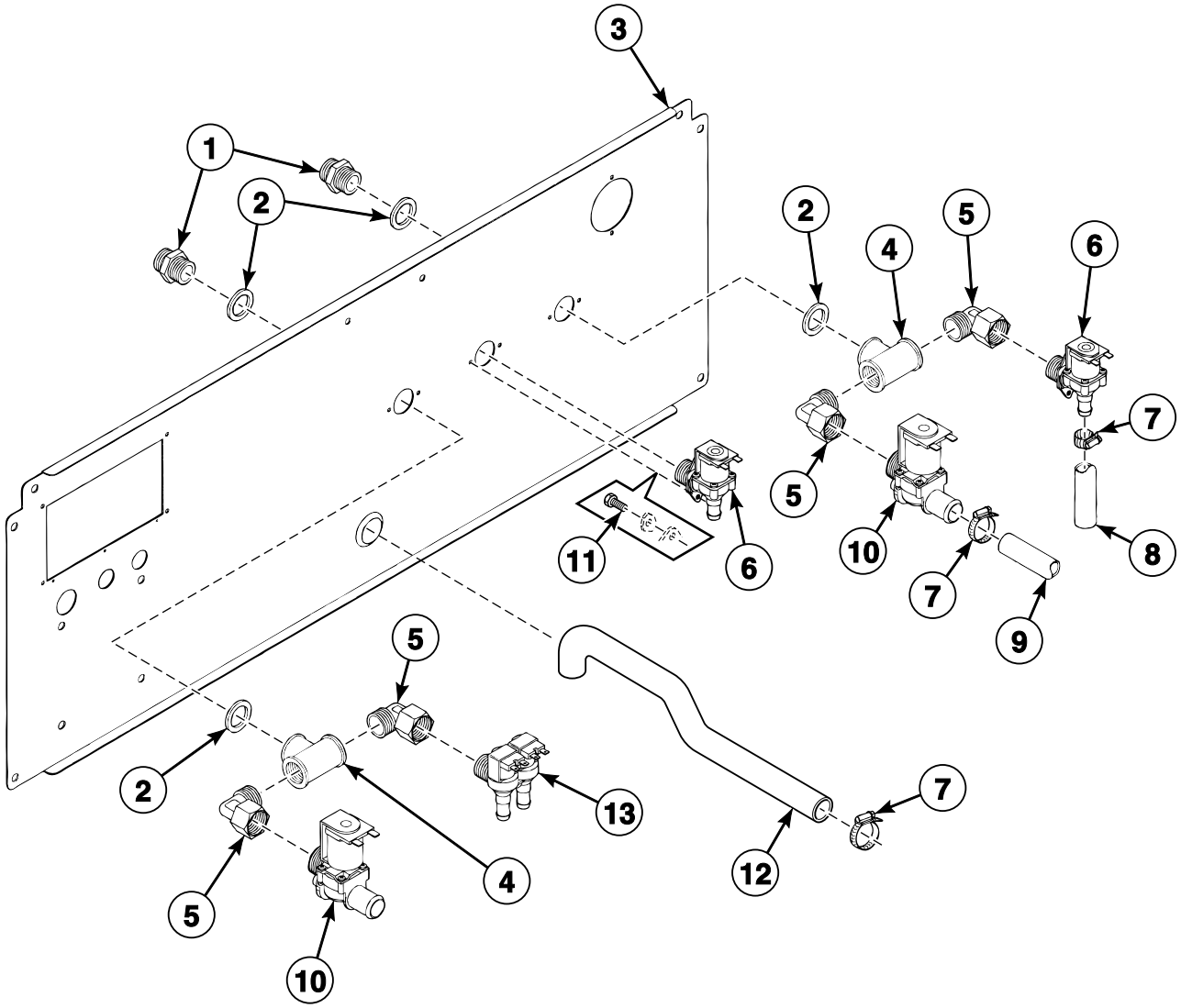

BE000428P_D0245

© Copyright, Alliance Laundry Systems LLC – DO NOT COPY or TRANSMIT

Upper Back Panel - Models Through 12/31/94

REF	PART NO.	DESCRIPTION	COMMENTS
1	223/00121/00	Connector	
2	223/00042/00	O-Ring	
3	133/00001/00	Backbridge	
4	223/00043/00	T-Piece	
5	223/00218/00	Elbow	
6	209/00276/00	Inlet Valve	
7	223/00011/00	Hose Clamp	
8	223/00044/00	Water Hose	
9	223/00059/00	Water Hose	
10	209/00137/00	Inlet Valve	
11	206/00027/00	Bolt	
12	223/00018/00	Hose	
13	209/00110/00	2-Way Inlet Valve	

© Copyright, Alliance Laundry Systems LLC – DO NOT COPY or TRANSMIT

Upper Back Panel - Models Starting 1/1/95

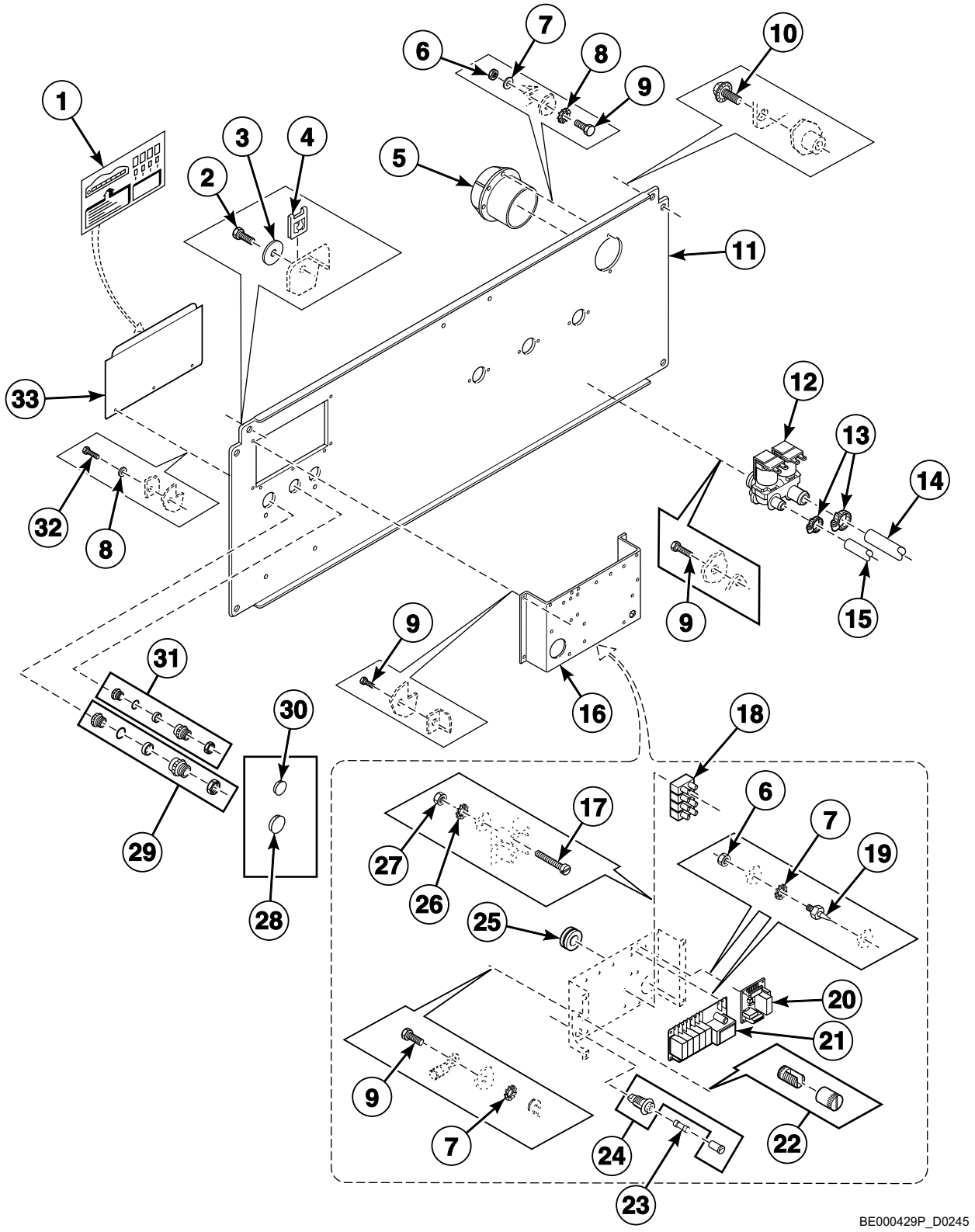

© Copyright, Alliance Laundry Systems LLC – DO NOT COPY or TRANSMIT

Upper Back Panel - Models Starting 1/1/95

REF	PART NO.	DESCRIPTION	COMMENTS
1	229/00068/00	Sticker	
2	208/00001/00	Screw	
3	201/00006/00	Washer	
4	208/00002/00	Nut	
5	223/00102/07	Hose Vent	
6	204/00007/00	Nut	
7	203/00006/00	Washer	
8	202/00004/00	Washer	
9	206/00027/00	Bolt	
10	206/00099/00	Bolt	
11	111/01160/00	Backbridge	Models with an inverter drive
	111/01166/10	Backbridge	Models without an inverter drive
12	209/00316/00	2-Way Inlet Valve	
13	223/00011/00	Hose Clamp	
14	223/00059/00	Water Hose	
15	223/00044/00	Water Hose	
16	111/00188/03	Assembly Plate	
17	207/00014/00	Screw	
18	209/00058/00	Terminal Block	
19	211/00120/00	Standoff	
20	209/00438/00	Central Control Board	
21	209/00218/01	Printboard	
22	209/00006/00	Terminal	
23	209/00195/00	Fuse	
24	209/00202/00	Fuse Holder	
25	225/00027/00	Cable Duct	
26	203/00007/00	Washer	
27	204/00008/00	Nut	
28	211/00087/00	Plug	
29	211/00022/00	Nut	
30	B12500101	Plug	
31	211/00023/00	Nut	
32	205/00113/00	Bolt	
33	111/00426/01	Electrical Connection Cover	

© Copyright, Alliance Laundry Systems LLC – DO NOT COPY or TRANSMIT

Supply Dispenser - Models Through 12/31/92 with 1.5 Inch Supply Dispenser Hose

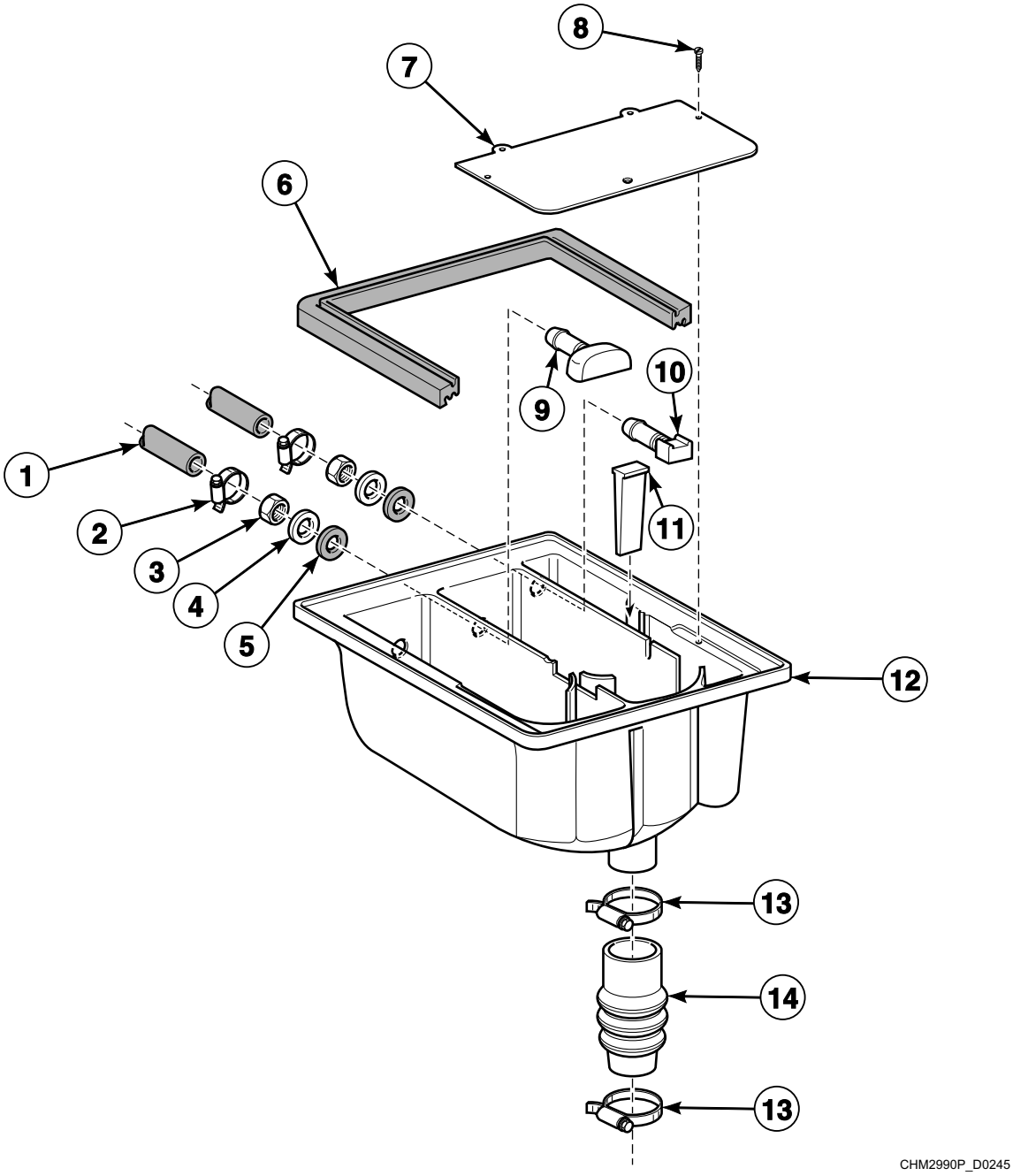

© Copyright, Alliance Laundry Systems LLC – DO NOT COPY or TRANSMIT

Supply Dispenser - Models Through 12/31/92 with 1.5 Inch Supply Dispenser Hose

REF	PART NO.	DESCRIPTION	COMMENTS
1	223/00044/00	Water Hose	
2	223/00010/00	Hose Clamp	
3	204/00201/00	Nut	
4	201/00002/00	Washer	
5	223/00001/07	Washer	
6	223/00003/00	Lid Seal	
7	223/00001/06	Mounting Plate	
8	208/00130/00	Screw	
9	223/00001/04	Prewash and Mainwash Nozzle	
10	223/00001/05	Injector	
11	223/00001/03	Separator Plate	
12	223/00001/01	Soap Dispenser	
13	223/00013/00	Hose Clamp	
14	223/00007/00	Hose	

© Copyright, Alliance Laundry Systems LLC – DO NOT COPY or TRANSMIT

Supply Dispenser - Models Through 12/31/92 with 4 Inch Supply Dispenser Hose

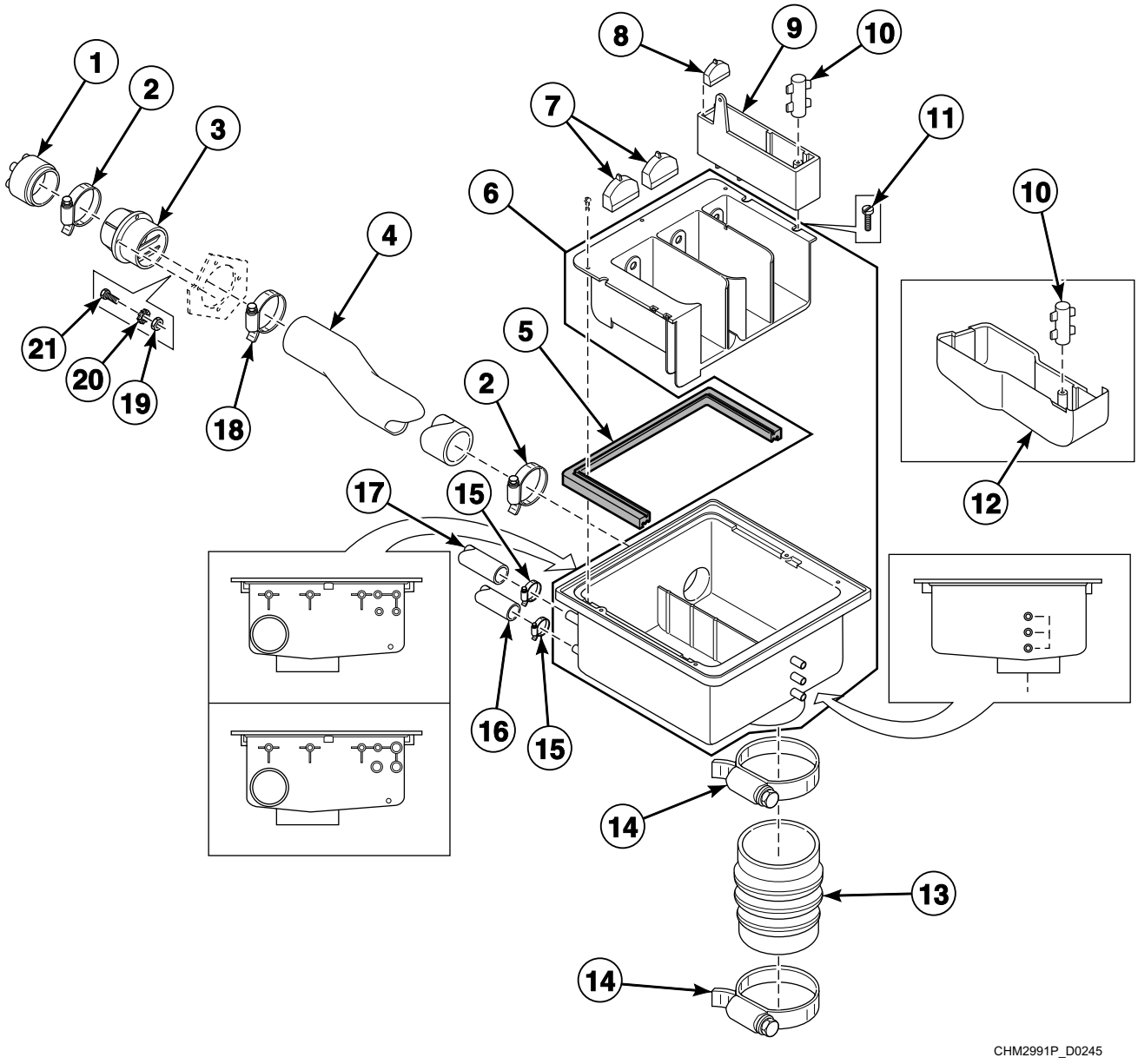

© Copyright, Alliance Laundry Systems LLC – DO NOT COPY or TRANSMIT

Supply Dispenser - Models Through 12/31/92 with 4 Inch Supply Dispenser Hose

REF	PART NO.	DESCRIPTION	COMMENTS
1	223/00160/00	Liquid Soap Hose	
2	223/00014/00	Hose Clamp	
3	223/00102/07	Hose Vent	
4	223/00107/01	Ventilating Hose	
5	223/00109/00	Soap Dispenser Gasket	
6	223/00102/30	Soap Dispenser Assembly	
7	223/00102/06	Soap Spray Nozzle	
8	223/00102/05	Softener Spray Nozzle	
9	223/00102/03	Rinse Insert	
10	223/00102/04	Soap Dispenser Rinse Siphon	
11	208/00130/00	Screw	
12	223/00102/08	Liquid Soap Dispenser Insert	
13	223/00115/00	Hose	
14	223/00023/00	Hose Clamp	
15	223/00009/00	Clamp	
16	223/00059/00	Water Hose	20 mm diameter
17	223/00188/00	Hose	25 mm diameter
18	223/00013/00	Hose Clamp	
19	204/00105/00	Nut	
20	203/00008/00	Washer	
21	207/00106/00	Screw	

© Copyright, Alliance Laundry Systems LLC – DO NOT COPY or TRANSMIT

Supply Dispenser - Models Through 12/31/94

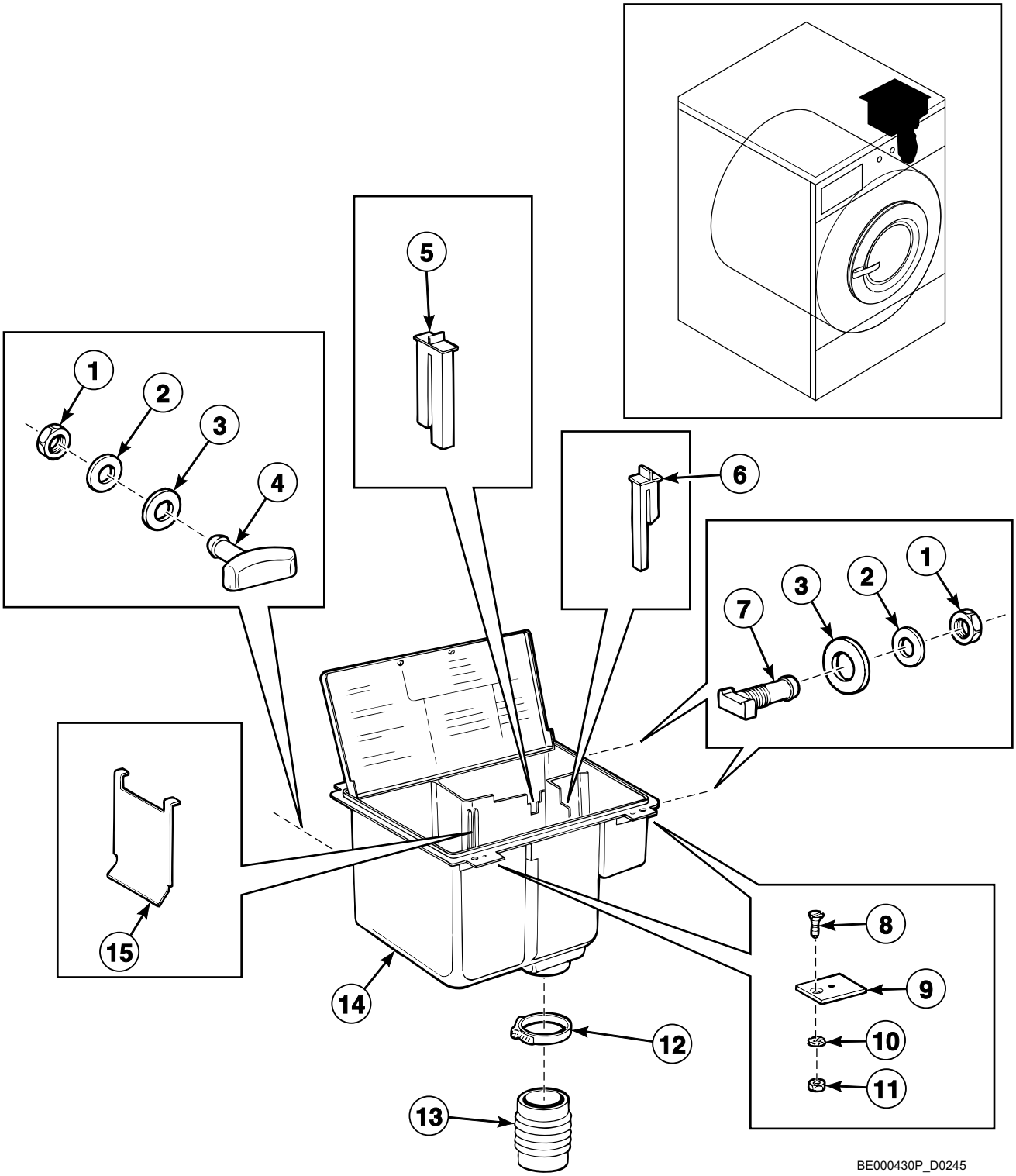

© Copyright, Alliance Laundry Systems LLC – DO NOT COPY or TRANSMIT

Supply Dispenser - Models Through 12/31/94

REF	PART NO.	DESCRIPTION	COMMENTS
1	204/00201/00	Nut	
2	201/00002/00	Washer	
3	223/00001/07	Washer	
4	223/00001/04	Prewash and Mainwash Nozzle	
5	223/00063/03	Hose	
6	223/00063/02	Hose	
7	223/00001/05	Injector	
8	207/00104/00	Screw	
9	223/00063/06	Soap Dispenser Mounting Plate	
10	203/00005/00	Washer	
11	204/00107/00	Nut	
12	223/00014/00	Hose Clamp	
13	223/00063/05	Hose	
14	223/00063/00	Soap Dispenser Assembly	Includes 223/00063/01 Soap Dispenser Box and 223/00063/07 Soap Dispenser Top
	223/00063/01	Soap Dispenser Box	
	223/00063/07	Soap Dispenser Top	
15	223/00063/04	Separator Plate	

© Copyright, Alliance Laundry Systems LLC – DO NOT COPY or TRANSMIT

Supply Dispenser - Models Starting 1/1/95

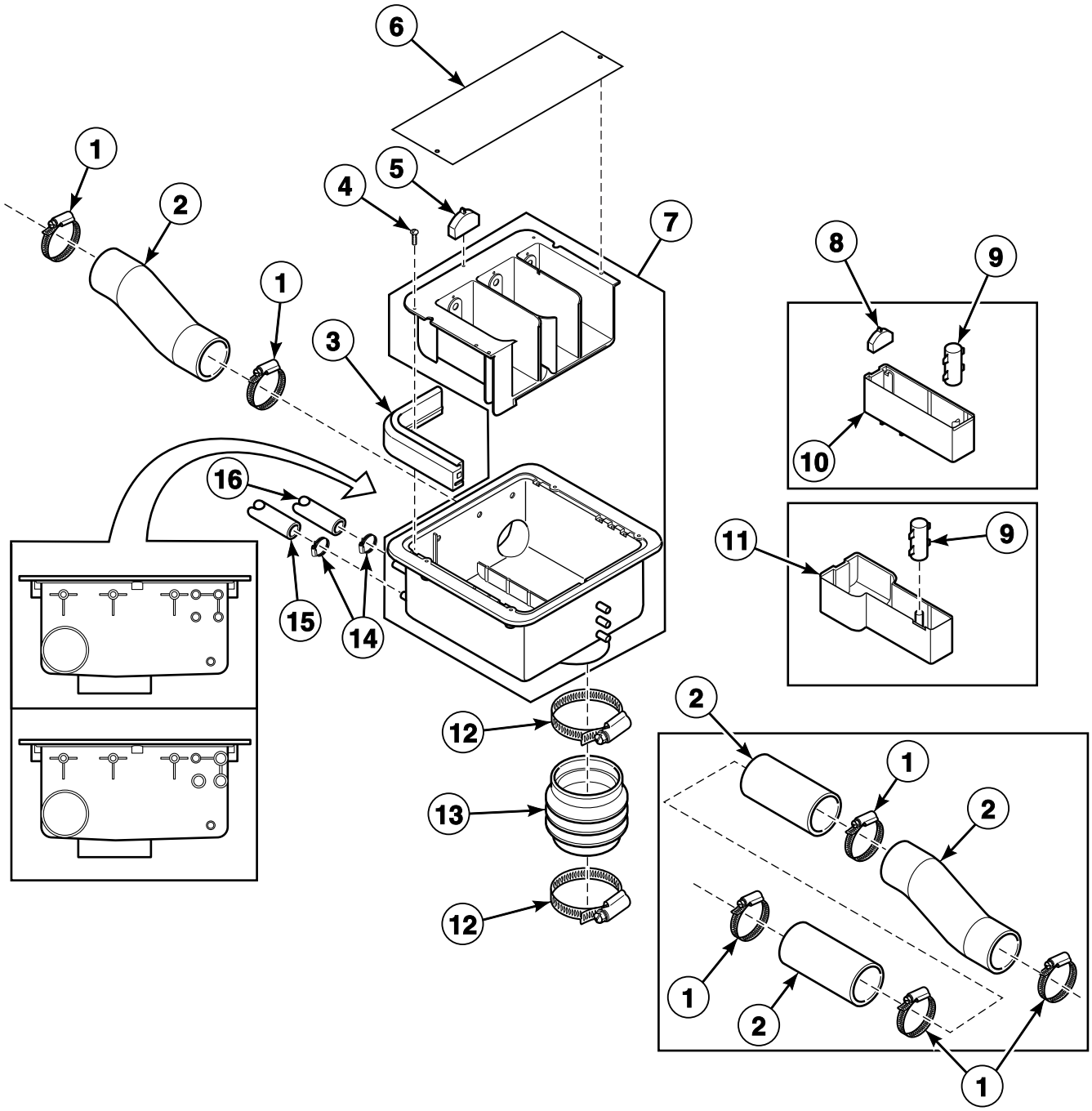

CFD482P_D0245

© Copyright, Alliance Laundry Systems LLC – DO NOT COPY or TRANSMIT

Supply Dispenser - Models Starting 1/1/95

REF	PART NO.	DESCRIPTION	COMMENTS
1	223/00014/00	Hose Clamp	
2	223/00107/04	Hose Vent	
3	223/00109/00	Soap Dispenser Gasket	
4	B12347501	Screw	
5	223/00102/06	Soap Spray Nozzle	
6	123/00107/00	Anti-Splash Plate	Sigma control models
	123/00103/06	Soap Box Assembly Plate	All other models
7	223/00102/30	Soap Dispenser Assembly	
8	223/00102/05	Softener Spray Nozzle	
9	223/00102/04	Soap Dispenser Rinse Siphon	
10	223/00102/03	Rinse Insert	
11	223/00102/08	Liquid Soap Dispenser Insert	
12	223/00023/00	Hose Clamp	
13	223/00115/00	Hose	
14	223/00010/00	Hose Clamp	
15	223/00059/00	Water Hose	
16	223/00044/00	Water Hose	

© Copyright, Alliance Laundry Systems LLC – DO NOT COPY or TRANSMIT

Steam and Electric Heating Options

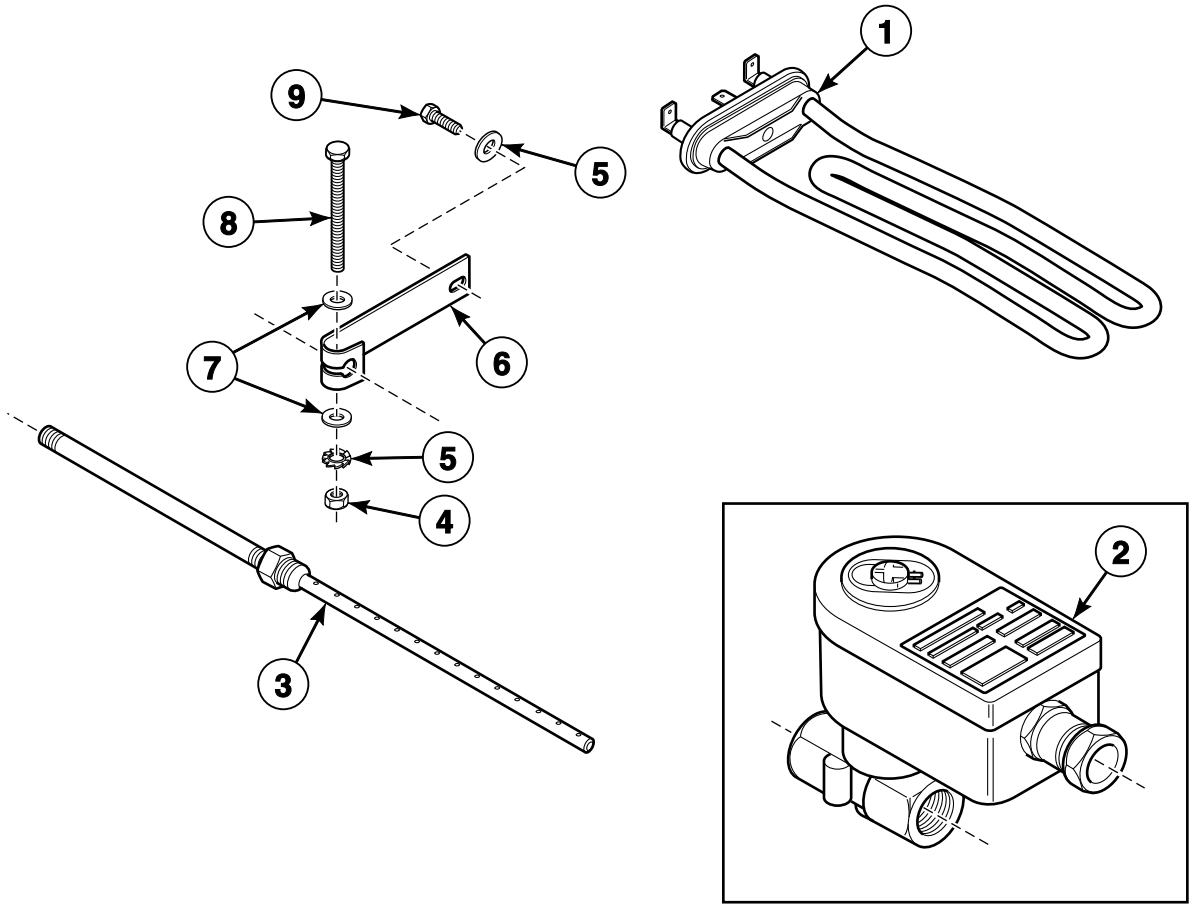

BE000432P_D0245

© Copyright, Alliance Laundry Systems LLC – DO NOT COPY or TRANSMIT

Steam and Electric Heating Options

REF	PART NO.	DESCRIPTION	COMMENTS
1	209/00198/20	Heating Element	2 x 500W; 200 Volt
	209/00198/21	Heating Element	2 x 500W; 200 Volt; Bent
	209/00049/01	Heating Element	3000W; 220 Volt; Bent
	209/00049/00	Heating Element	3000W; 220 or 240 Volt
	209/00581/00	Heating Element	4000W; 380 Volt
	209/00050/01	Heating Element	4000W; 380 Volt; Bent
2	209/00189/00	Steam Valve	
3	131/00007/00	Steam Injector	
4	204/00004/00	Nut	
5	203/00003/00	Washer	
6	131/00008/00	Mounting Plate	
7	202/00002/00	Washer	
8	206/00036/00	Bolt	
9	206/00055/00	Screw	

© Copyright, Alliance Laundry Systems LLC – DO NOT COPY or TRANSMIT

Soap Pump - Knight

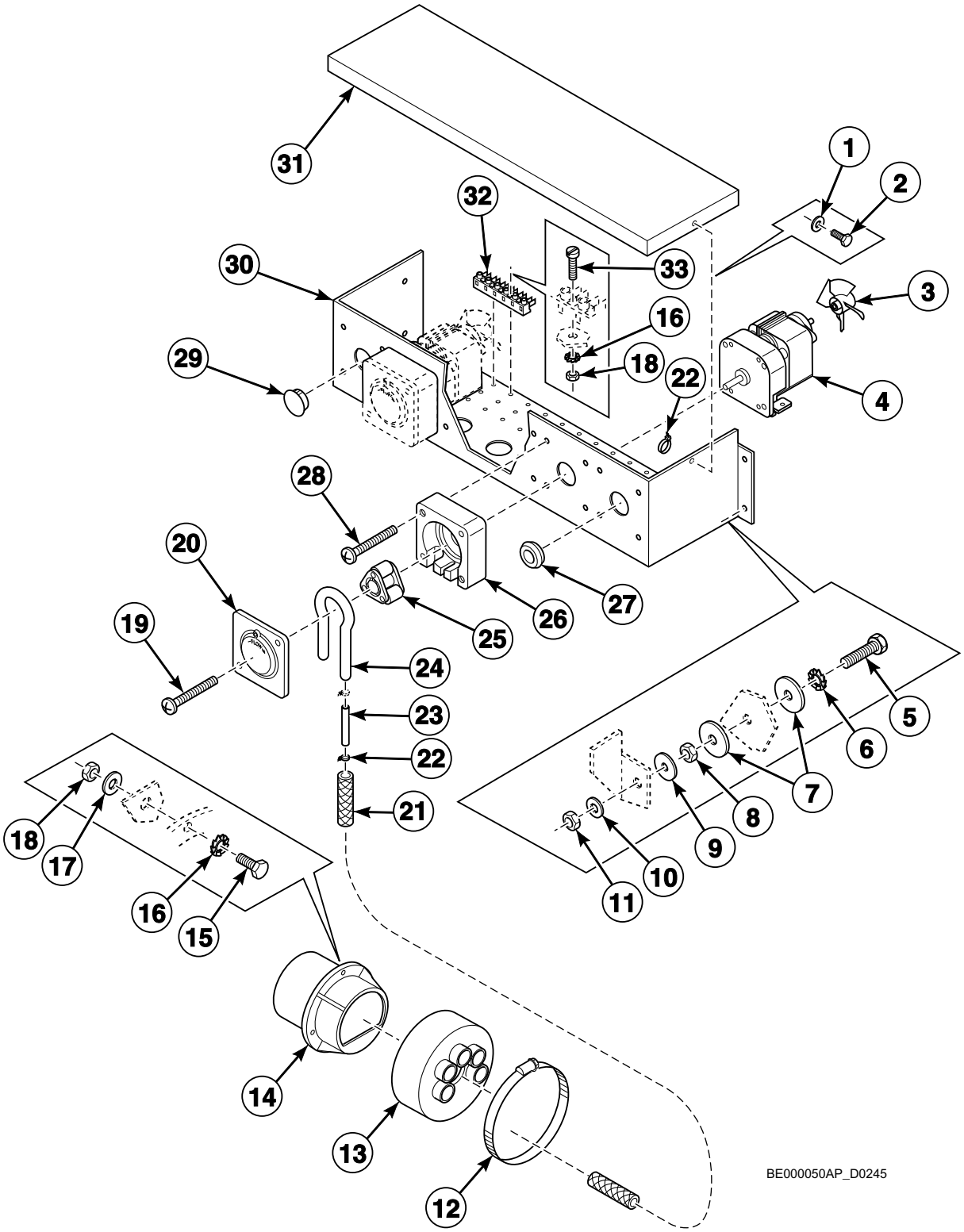

© Copyright, Alliance Laundry Systems LLC – DO NOT COPY or TRANSMIT

Soap Pump - Knight

REF	PART NO.	DESCRIPTION	COMMENTS
1	202/00109/00	Washer	
2	205/00113/00	Bolt	
3	209/00413/08	Motor	
4	209/00413/06	Fan Motor	
5	205/00103/00	Bolt	
6	203/00004/00	Washer	
7	202/00108/00	Washer	
8	204/00005/00	Nut	
9	202/00106/00	Washer	
10	202/00101/00	Washer	
11	204/00009/00	Nut	
12	223/00014/00	Hose Clamp	
13	223/00160/00	Liquid Soap Hose	
14	223/00102/07	Hose Vent	
15	206/00027/00	Bolt	
16	203/00006/00	Washer	
17	202/00004/00	Washer	
18	204/00007/00	Nut	
19	209/00413/05	Screw	
20	209/00413/09	Cover Plate	
21	223/00179/00	Soap Injector Hose	
22	211/00088/00	Cable Tie	
23	223/00180/01	Hose	
24	209/00413/03	Hose	
25	209/00413/07	Pressure Roller	
26	209/00413/10	Pump Housing	
27	223/00198/00	Grommet	
28	209/00413/04	Screw	
29	211/00087/00	Plug	
30	111/00190/00	Pump Assembly Plate	
31	111/00190/01	Pump Top Plate	
32	210/10007/00	Connection	
33	207/00003/00	Screw	

© Copyright, Alliance Laundry Systems LLC – DO NOT COPY or TRANSMIT

Soap Pump - Brightwell

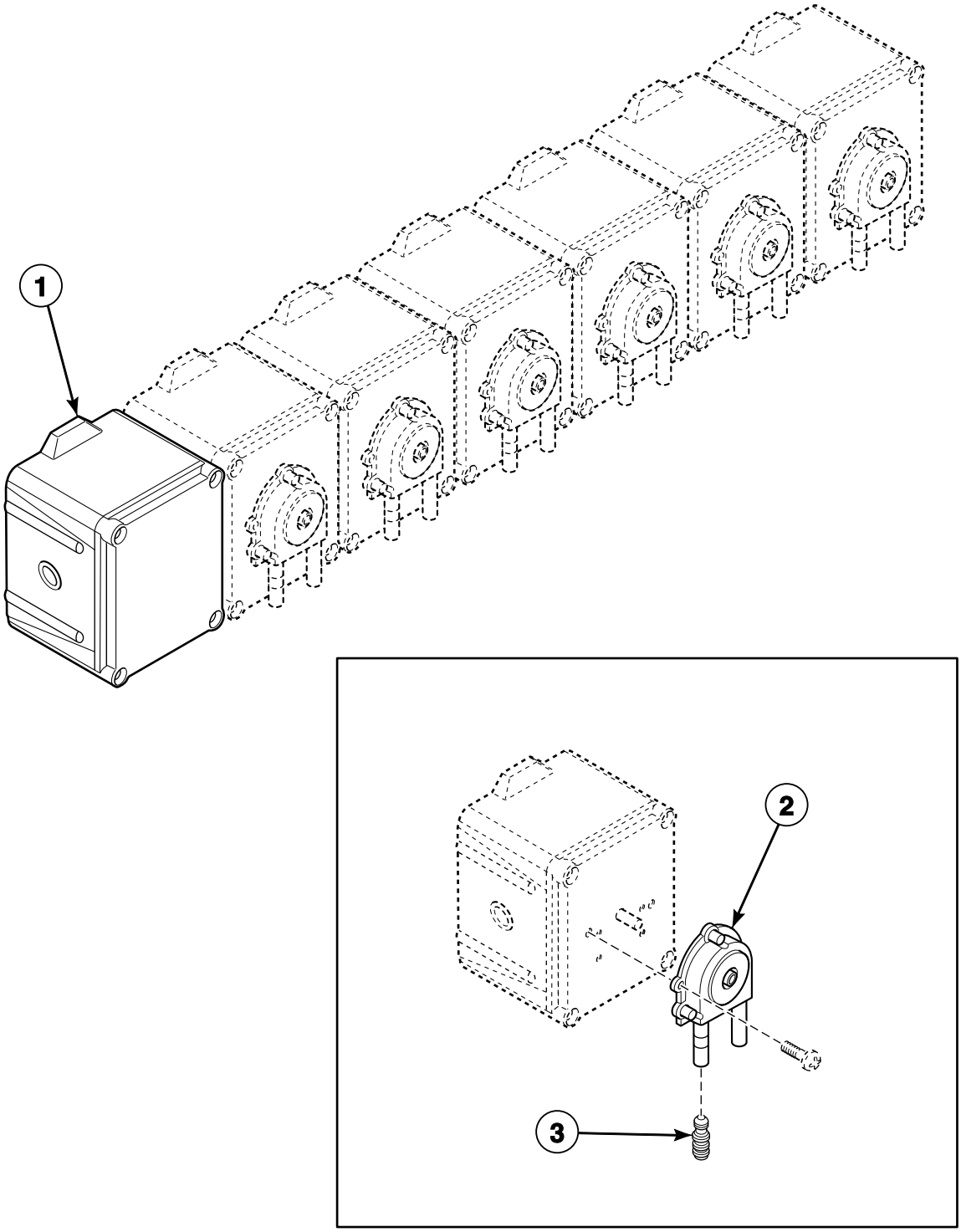

BE000527P_D0245

© Copyright, Alliance Laundry Systems LLC – DO NOT COPY or TRANSMIT

Soap Pump - Brightwell

REF	PART NO.	DESCRIPTION	COMMENTS
1	209/00554/01	Soap Pump Assembly	1 pump
	209/00554/02	Soap Pump Assembly	2 pumps
	209/00554/03	Soap Pump Assembly	3 pumps
	209/00554/04	Soap Pump Assembly	4 pumps
	209/00554/05	Soap Pump Assembly	5 pumps
	209/00554/06	Soap Pump Assembly	6 pumps
2	209/00554/98	Hose	
3	209/00554/99	Hose Connector	

© Copyright, Alliance Laundry Systems LLC – DO NOT COPY or TRANSMIT

Notes

© Copyright, Alliance Laundry Systems LLC – DO NOT COPY or TRANSMIT

Parts Index

A

Anti-Splash Plate
123/00107/00 81

Assembly Plate
111/00072/00 55
111/00076/00 9
111/00188/03 73
111/00198/00 59
140/00020/00 57
140/00020/01 57
140/00020/10 57
140/00020/11 57

Assembly Plate Support
111/00198/01 59

Auxiliary Contactor
209/00011/02 55

B

Back Panel
133/00115/00 67

Backbridge
111/01160/00 ..... 69, 73
111/01166/10 ..... 69, 73
133/00001/00 ..... 69, 71

Ball Bearing
212/00004/00 11

Bearing Cover
112/00003/00 11

Bearing Housing Assembly
212/00001/01 11

Bearing Kit
KBRGWE304 11
KBRGWE304WB 11

Bearing Spacer
232/00020/00 15

Bearing Tool Kit
387P3 11

Belt
212/00014/00 ..... 15, 17
226/00028/00 15
226/00112/00 17

Bolt
205/00103/00 85
205/00104/00 ..... 11, 29, 33, 47, 51, 67, 69
205/00106/00 47
205/00108/00 67
205/00113/00 ..... 73, 85
206/00004/00 15
206/00006/00 17
206/00010/00 ..... 11, 17, 23
206/00012/00 13
206/00013/00 ..... 9, 49
206/00016/00 ..... 47, 51, 67
206/00027/00 ..... 71, 73, 85
206/00029/00 13
206/00030/00 13
206/00033/00 61
206/00034/00 13
206/00036/00 83
206/00037/00 17
206/00054/00 ..... 49, 53
206/00099/00 ..... 49, 57, 59, 67, 69, 73
208/00106/00 51

C

Cable Duct
225/00027/00 73

Cable Tie
211/00088/00 85

Central Control Board
209/00438/00 73

Circuit Board Cover
229/00262/00 ..... 39, 41, 43

Clamp
112/00021/00 17
223/00009/00 77
223/00057/00 23

Coil
209/00051/21 ..... 25, 27
209/00052/21 ..... 25, 27
209/00203/21 ..... 25, 27

Coin Box
211/00071/00 61
211/00101/00 61

Coin Box Key
211/00065/02 61

Coin Box Lock
211/00065/00 61

Coin Box Ring
111/00066/00 61

Coin Box Ring Assembly
111/00100/00 61

Coin Display
209/00217/00 53

Coin Drop
209/00060/00 65

Coin Drop Microswitch
209/00060/12 61

Coin Meter
209/00061/00 65
209/00062/00 65
209/00064/00 63
209/00065/00 63
209/00066/00 65
209/00068/00 65
209/00069/00 65
209/00070/00 65
209/00072/00 65
209/00111/00 63
209/00111/10 63
209/00119/00 63
209/00120/00 63
209/00121/00 65
209/00122/00 65
209/00123/00 65
209/00156/00 65
209/00158/00 65
209/00160/00 65
209/00161/00 65

N/A items do not appear in index.

© Copyright, Alliance Laundry Systems LLC – DO NOT COPY or TRANSMIT

209/00162/00 65
209/00166/00 63
209/00214/00 63
209/00215/00 63
209/00215/01 63
209/00216/00 65
209/00229/00 63
209/00269/00 65
209/00278/00 65
209/00286/00 65
209/00296/00 65
209/00364/00 63
209/00373/00 65
209/00375/00 63
209/00378/00 63
209/00383/00 63
209/00387/00 63
209/00388/00 63
209/00389/00 63
209/00390/00 63
209/00391/00 63
209/00402/01 65
209/00402/02 65
209/00402/03 65
209/00402/04 65
209/00402/07 65
209/00402/08 63
209/00403/00 63
209/00404/00 63
209/00407/00 65
209/00411/00 65
209/00414/00 63
209/00415/00 63
209/00418/00 63
209/00428/00 65
209/00437/00 63
209/00442/00 63
209/00460/00 63
209/00469/00 65
209/00500/00 63
209/00501/00 65
209/00502/00 65
209/00522/00 65
209/00548/00 65
209/00553/00 65
209/00576/00 63
209/10215/00 63

Connection
210/10007/00 85

Connector
212/00011/00 11
223/00121/00 71

Contact Switch
209/00099/26 ..... 43, 45

Contactor
209/00041/03 ..... 55, 59
209/00041/04 57
209/00041/05 ..... 55, 57, 59
209/00136/02 55
209/00139/02 55
209/00140/02 55
209/00148/02 ..... 55, 57, 59

Control Board
209/00547/00 41

Counter Ring
232/00008/00 15

Cover Plate
209/00413/09 85

D

Decal
225/00403/00 41

Display
223/10066/00 51

Door
118/00125/00 ..... 29, 33

Door Axle Roller
217/00013/05 ..... 35, 37

Door Circlip
217/00013/11 ..... 35, 37

Door Front Panel
111/05015/00 43

Door Glass
B12449801 ..... 29, 33

Door Glass Seal
223/00068/00 ..... 29, 33

Door Handle
217/00013/12 ..... 35, 37
217/00051/00 ..... 33, 35, 37
217/00055/00 29

Door Handle Assembly Plate
217/00013/16 35

Door Handle Catch
217/00051/13 37

Door Handle Hook
217/00013/13 35

Door Handle Latch
217/00013/04 35
217/00051/14 ..... 35, 37

Door Handle Locking Pin
217/00013/15 35

Door Handle Spring
217/00013/14 ..... 35, 37

Door Handle Stop
217/00016/00 ..... 29, 33

Door Hinge
217/00009/01 29

Door Hinge Assembly
217/00009/02 29

Door Hinge Block
253/00022/00 33

Door Hinge Plate Assembly
111/00003/00 33

Door Hinge Spacer
117/00010/00 29
118/00122/00 33
118/00124/00 33

Door Latch Cord
224/00015/00 31

Door Lock Assembly
217/00017/00 29
217/00052/01A 31

Door Lock Board
209/00275/04 ..... 31, 49, 53

Door Lock Microswitch
209/00272/00 31

Door Lock Pin Kit
211/00109/01 33
217/00052/02 31

Door Lock Solenoid
209/00274/00 31

N/A items do not appear in index.

© Copyright, Alliance Laundry Systems LLC – DO NOT COPY or TRANSMIT

Door Lock Spacer
217/00052/03 31
Door Lock Spring
217/00013/03 ..... 35, 37
224/00049/00 31
Door Locking Grip
217/00013/07 ..... 35, 37
Door Locking Pin
217/00013/08 ..... 35, 37
217/00051/15 37
Door Mounting Pin
217/00013/09 ..... 35, 37
Door Roller
217/00013/06 ..... 35, 37
Door Switch
209/00023/00 29
Drain Elbow
223/00056/00 23
Drain Valve
209/00075/00 23
209/00075/05 ..... 25, 27
209/00171/00 23
Drain Valve Handle
209/00115/11 27
Drain Valve Motor
209/00051/11 25
209/00052/11 25
209/00052/12 27
209/00203/11 25
209/00203/12 27
Drain Valve Motor Assembly
209/00170/06 27
Drain Valve Motor Mounting Plate
209/00025/07 25
209/00115/04 27
Drain Valve Shaft
209/00170/10 ..... 25, 27
Drain Valve Shaft Seal
209/00025/10 ..... 25, 27
Drain Valve Spring
209/00025/13 25
209/00170/02 27
Drum and Axle
132/00007/00 13
132/10006/00 13

E

Elbow
212/00012/00 11
223/00218/00 71
Electrical Connection Cover
111/00426/01 73
Eprom
209/00266/01 ..... 39, 41

F

Fan Motor
209/00413/06 85
Fastener
225/10023/00 ..... 47, 51
Frame
130/00002/00 9
Front Bridge
133/00003/00 ..... 47, 49, 51, 53
Front Panel
111/00202/00 45
113/00111/00 47
131/00002/00 13
133/00112/00 51
225/00112/ABL 47
225/00274/00 ..... 43, 45
Front Plate
111/00068/00 61
Fuse
209/00195/00 73
209/00372/01 43
209/00439/00 ..... 39, 41
Fuse Holder
209/00202/00 73

G

Grease Pipe
212/00010/00 11
Grease Ring
212/00007/00 11
Grommet
223/00198/00 ..... 57, 59, 85
Ground Terminal
210/10015/00 31

H

Heating Element
209/00049/00 83
209/00049/01 83
209/00050/01 83
209/00198/20 83
209/00198/21 83
209/00581/00 83
Hinge
131/00046/00 33
Holder
217/00019/00 29
Hook
111/00001/00 ..... 47, 51, 67
111/00002/00 ..... 47, 51, 67
Hose
209/00413/03 85
209/00554/98 87
223/00007/00 75
223/00018/00 71
223/00063/02 79
223/00063/03 79
223/00063/05 79
223/00115/00 ..... 77, 81
223/00180/01 85
223/00188/00 77
Hose Barb
223/00016/00 ..... 55, 57, 59
Hose Clamp
223/00010/00 ..... 75, 81
223/00011/00 ..... 23, 55, 57, 59, 71, 73

N/A items do not appear in index.

© Copyright, Alliance Laundry Systems LLC – DO NOT COPY or TRANSMIT

223/00013/00 ..... 23, 75, 77
223/00014/00 ..... 77, 79, 81, 85
223/00023/00 ..... 77, 81

Hose Connector
209/00554/99 87

Hose Vent
223/00102/07 ..... 73, 77, 85
223/00107/04 81

I

Infrared Cable
210/00902/00 43

Injector
223/00001/05 ..... 75, 79

Inlet Valve
209/00137/00 71
209/00276/00 71

Inlet Valve, 2-Way
209/00110/00 71
209/00316/00 73

Inner Coin Box
211/00070/03 61

Insulating Sticker
229/00255/00 ..... 39, 41, 43

Insulation Plate
217/00038/00 29

Interlock Coil Spring
224/00043/00 31

Interlock Lever
217/00052/04 31

Interlock Pin
224/00003/00 29

Inverter Drive
F8421313 21
F8421314 21

Inverter Drive Kit
F8421213 21
F8421214 21

K

Key
212/00026/00 15

Key Clip
212/00015/00 17

Keyboard
209/00323/01 45

Keypad
209/00552/01 43

L

Label
229/00245/00 45

Lamp
209/00151/00 ..... 47, 51

Lens Cover
209/00152/00 ..... 47, 51
209/00154/00 ..... 47, 51

Level Switch Elbow
223/00015/00 ..... 55, 57, 59

Lever Spring
224/00040/00 31

Lid Seal
223/00003/00 75

Light Microswitch
209/00273/00 31

Liquid Soap Dispenser Insert
223/00102/08 ..... 77, 81

Liquid Soap Hose
223/00160/00 ..... 77, 85

Lock
209/00279/00 ..... 57, 59

Lock Shaft
217/00017/03 31

Lower Front Panel
111/00164/00 67
111/00229/00 67
133/00131/00 69

Lubricator
212/00002/00 11

Lug Holder
209/00452/02 ..... 57, 59

M

Main Board
B12351701 43

Metal Disc
202/00120/00 43

Motor
B12510901 19
209/00413/08 85
234/00001/00 17
234/00002/00 17
234/00003/00 17
234/00004/00 17
234/00011/00 17
234/00012/00 17
234/00013/00 17
234/00014/00 17

Motor Key
227/00127/01 17

Motor Plate
112/00022/00 17
134/00021/00 17

Mounting Plate
111/00035/00 55
131/00008/00 83
140/00012/00 ..... 49, 53
223/00001/06 75

Mushroom Pushbutton
209/00248/20 ..... 43, 45

N

Nut
204/00001/00 17
204/00002/00 ..... 13, 17
204/00003/00 ..... 13, 17
204/00004/00 ..... 23, 83
204/00005/00 ..... 57, 61, 69, 85

N/A items do not appear in index.

© Copyright, Alliance Laundry Systems LLC – DO NOT COPY or TRANSMIT

204/00007/00 ..... 31, 49, 53, 55, 57, 73, 85
204/00008/00 ..... 31, 61, 73
204/00009/00 ..... 29, 39, 41, 85
204/00012/00 11
204/00013/00 ..... 47, 49, 51, 53
204/00103/00 ..... 29, 33
204/00105/00 77
204/00106/00 ..... 29, 33, 47, 51, 67
204/00107/00 ..... 47, 51, 67, 79
204/00114/00 ..... 41, 45, 47, 51
204/00116/00 ..... 39, 43, 45
204/00201/00 ..... 75, 79
206/00101/00 ..... 9, 13, 49, 59, 67, 69
208/00002/00 73
208/00104/00 67
211/00022/00 73
211/00023/00 73
211/00065/01 61

O

Operating Sticker
225/00404/00 41
225/00405/00 41

O-Ring
217/00021/00 ..... 29, 31, 33
223/00042/00 71
231/00036/00 11

Outer Cabinet Lock
211/00070/01 61

Outer Coin Box
211/00100/00 61

Outlet Pipe Plate Assembly
101/00007/00 69

Overflow Hose
223/00131/00 23

Overlay
225/00365/00 43

P

Panel
225/00299/AOL 41
225/00299/A0L 39
225/00307/AOL 39, 41
325/00272/ABL 51

Pin
208/00004/00 29
211/00105/00 29

Pipe Clip
239/00005/01W 15

Plexi Frame
225/00316/00 ..... 39, 41

Plug
B12500101 73
211/00087/00 ..... 73, 85

Pressure Hose
223/00082/00 ..... 55, 57, 59

Pressure Roller
209/00413/07 85

Pressure Switch
209/00007/30 55
209/00007/50 57

Pressure Switch Bracket
111/00424/00 55

Pressure Switch Hose Tee
223/00173/00 ..... 57, 59

Prewash and Mainwash Nozzle
223/00001/04 ..... 75, 79

Printboard
209/00218/01 73
209/00323/02 57
209/00440/00 39
209/00440/70 39
209/00452/01 ..... 57, 59

Program Indicator
225/00001/00 49
225/00078/00 ..... 47, 51

Programming Key Contact Switch
209/00326/20 ..... 43, 45

Protection Block
217/00017/02 29

Protector
209/00263/00 ..... 55, 57, 59
209/00264/00 ..... 55, 57, 59
209/00265/00 55
209/00285/00 ..... 55, 57, 59
209/00299/00 ..... 55, 57, 59

Pulley
212/00009/00 15
212/00016/00 17
212/00017/00 17
212/00019/00 17
226/00092/00 19

Pulley Hub
212/00009/01 15
212/00016/01 17

Pump Assembly Plate
111/00190/00 85

Pump Housing
209/00413/10 85

Pump Top Plate
111/00190/01 85

Pushbutton
209/00175/01 ..... 49, 53
209/00396/00 61

R

Rail
111/00074/00 55

Retainer Ring
212/00006/00 11

Retaining Ring
117/00042/00 ..... 47, 51

Reversing Timer
209/00012/00 55

Rinse Insert
223/00102/03 ..... 77, 81

Roll Pin
208/00013/00 61

Roller Bearing
212/00005/00 ..... 11, 15

N/A items do not appear in index.

© Copyright, Alliance Laundry Systems LLC – DO NOT COPY or TRANSMIT

S

Safety Ring Tub Clip
231/00009/00 13

Screw
B12347501 81
B12500801 29
206/00021/00 ..... 49, 55
206/00031/00 17
206/00038/00 61
206/00053/00 15
206/00055/00 83
207/00003/00 ..... 57, 85
207/00004/00 ..... 15, 55
207/00009/00 ..... 31, 61
207/00014/00 73
207/00020/00 33
207/00102/00 ..... 29, 31
207/00103/00 ..... 29, 31
207/00104/00 79
207/00106/00 77
207/00108/00 61
207/00109/00 29
207/00126/00 33
207/00130/00 69
207/00135/00 31
208/00001/00 73
208/00007/00 ..... 55, 61
208/00130/00 ..... 75, 77
209/00025/08 ..... 25, 27
209/00170/05 ..... 25, 27
209/00170/07 ..... 25, 27
209/00413/04 85
209/00413/05 85
212/00016/02 17

Seal Holder Assembly
131/00035/01 11

Separator Plate
223/00001/03 75
223/00063/04 79

Shaft Seal
132/00009/00 15
231/00037/00 11

Side Panel
133/00126/00 ..... 67, 69

Side Panel Gasket
246/00079/00 ..... 67, 69

Soap Box Assembly Plate
123/00103/06 81

Soap Dispenser
223/00001/01 75

Soap Dispenser Assembly
223/00063/00 79
223/00102/30 ..... 77, 81

Soap Dispenser Box
223/00063/01 79

Soap Dispenser Cover
223/00103/01 67

Soap Dispenser Cover Hinge Rod
223/00103/04 67

Soap Dispenser Frame
223/00103/03 67

Soap Dispenser Gasket
223/00109/00 ..... 77, 81

Soap Dispenser Mounting Plate
223/00063/06 79

Soap Dispenser Rinse Siphon
223/00102/04 ..... 77, 81

Soap Dispenser Top
223/00063/07 79

Soap Injector Hose
223/00179/00 85

Soap Pump Assembly
209/00554/01 87
209/00554/02 87
209/00554/03 87
209/00554/04 87
209/00554/05 87
209/00554/06 87

Soap Spray Nozzle
223/00102/06 ..... 77, 81

Softener Spray Nozzle
223/00102/05 ..... 77, 81

Spindle
111/00069/00 61

Spring
211/00070/04 61
217/00020/00 29

Standoff
211/00120/00 ..... 31, 49, 53, 57, 73
211/00122/00 ..... 39, 41, 43

Steam Injector
131/00007/00 83

Steam Valve
209/00189/00 83

Sticker
225/00308/00 39
225/00309/00 39
229/00068/00 73

Switch
209/00103/02 55

Switch Base
209/00099/25 ..... 43, 45

Switch Knob
209/00099/29 ..... 43, 45

Switch Lever
217/00052/05 31

T

Telem Sticker
209/00520/00 ..... 43, 45

Terminal
209/00006/00 73

Terminal Block
209/00005/00 57
209/00058/00 73

Thermostat
209/00243/00 55
211/00115/00 47

Thermostat Assembly
209/00309/02 ..... 57, 59

Thermostat Seal
223/00065/00 47
225/10004/00 ..... 57, 59

Timer
209/00107/00 49

N/A items do not appear in index.

© Copyright, Alliance Laundry Systems LLC – DO NOT COPY or TRANSMIT

Timer Mounting Plate
133/00004/00 49
Top Panel
133/00102/00 67
140/00024/00 67
T-Piece
223/00043/00 71
Tub
B12330501 13
119/10208/00 13
119/10210/00 13
131/00013/00 13
131/00045/00 13
Tub Fastening Ring
131/00005/00 13
Tub Front
138/00001/00 29
Tub Front Gasket
223/00242/00 29
231/00001/00 13
Tub Front Panel Clip
217/00008/00 13
Tub Front Ring Clamp
231/00010/00 13

U

Upper Front Panel
111/00185/00 ..... 39, 41

V

Ventilating Hose
223/00107/01 77

W

Washer
201/00001/00 11
201/00002/00 ..... 75, 79
201/00004/00 ..... 13, 17
201/00005/00 17
201/00006/00 ..... 17, 47, 49, 51, 57, 67, 73
201/00007/00 ..... 9, 13, 47, 49, 51, 53, 67
201/00008/00 ..... 39, 41, 43, 45, 47, 49, 51, 53
201/00009/00 13
201/00010/00 17
201/00011/00 15
201/00017/00 31
201/00018/00 31
201/00202/00 11
202/00002/00 ..... 17, 23, 83
202/00003/00 29
202/00004/00 ..... 73, 85
202/00101/00 ..... 29, 33, 67, 85
202/00103/00 ..... 47, 51
202/00104/00 33
202/00106/00 85
202/00108/00 85
202/00109/00 85
202/00111/00 33
203/00001/00 ..... 13, 15
203/00002/00 ..... 13, 17
203/00003/00 ..... 11, 17, 23, 47, 51, 67, 83
203/00004/00 ..... 49, 61, 69, 85
203/00005/00 ..... 47, 49, 51, 53, 67, 79
203/00006/00 ..... 31, 49, 53, 55, 57, 73, 85
203/00007/00 ..... 31, 61, 73
203/00008/00 ..... 33, 77
203/00010/00 31
208/00009/00 69
209/00025/12 ..... 25, 27
211/00070/02 61
217/00052/08 31
223/00001/07 ..... 75, 79
223/00051/10 ..... 43, 45
223/00065/01 47
223/00123/00 ..... 43, 45
Water Hose
223/00044/00 ..... 71, 73, 75, 81
223/00059/00 ..... 71, 73, 77, 81
Water Level Switch
209/00667/50 59

N/A items do not appear in index.

© Copyright, Alliance Laundry Systems LLC – DO NOT COPY or TRANSMIT

Notes

© Copyright, Alliance Laundry Systems LLC – DO NOT COPY or TRANSMIT